Accomplishments in Tobacco Research in North Carolina

March 1, 1984-February 28, 1985

2000269646

Source: https://www.industrydocuments.ucsf.edu/docs/qsyk0000

This information presented in the annual report is NOT FOR PUBLICATION but represents preliminary findings which may later appear in published form. We trust you will find this information of interest and value.

2000269647

Source: https://www.industrydocuments.ucsf.edu/docs/qsyk0000

PREFACE

The North Carolina Agricultural Research Service supported 67 projects on various aspects of tobacco research in 1984. Fifty-two faculty members from 10 of the 20 departments in the School of Agriculture and Life Sciences devoted 20.0 scientist years (full-time equivalence) to tobacco research. Total expenditures during 1984 were approximately $4.5 million, an increase of about $0.5 million over 1983. It is of interest to note that, 16 years ago (1968), 34 faculty from 9 departments devoted 24.6 scientist years to tobacco research with expenditures of approximately $1.4 million. Total support years for tobacco research in 1984 (includes scientists, post-doctorals, technicians, and clerical) was 106.2 SY.

The USDA-ARS Tobacco Research Laboratory at Oxford, N. C. is an essential component of our total tobacco research program; however, the above data do not include federal dollars expended in support of this laboratory.

Supplemental support provided by growers, warehousemen, leaf exporters and manufacturers of tobacco products through the North Carolina Tobacco Foundation continues to stimulate project leaders to strive for a "margin of excellence" that might not be obtainable with support only from appropriated funds. Mrs. Isabelle Fletcher of Lenoir County has provided outstanding leadership as President for the 1983-84 term and was reelected in October to serve a second term for 1984-85.

Since our last report Mr. Jesse W. Sumner, Superintendent of the Upper Coastal Plain Research Station, retired after 11 years of service at Rocky Mount. We wish him the very best in his retirement. His position was filled by Mr. Raymond D. Coltrain, Superintendent of the Peanut Belt Research Station. In USDA changes, the Agricultural Storage Insects Research Group was transferred from Richmond to Oxford.

We are pleased with the overall accomplishments in tobacco research during 1984 and look forward to new and exciting challenges of the 1985 season.

2000269648

Source: https://www.industrydocuments.ucsf.edu/docs/qsyk0000

TABLE OF CONTENTS

Page

BIOCHEMISTRY

Action of Ethylene on Tobacco Plants and Tissues 1
Edward C. Sisler

BIOLOGICAL AND AGRICULTURAL ENGINEERING

Automated Transplant Culturing and Transplanting in Tobacco Production .. 3
B. K. Huang

Improved Systems for Transplant Production and Direct Seeding of Tobacco 13
C. W. Suggs and S. C. Mohapatra

Mechanization of Tobacco Production 18
C. W. Suggs and R. W. Watkins

Optimization of Tobacco Curing Systems 29
C. W. Suggs and R. W. Watkins

Instrumentation and Procedure to Measure Quality and Composition of Agricultural Products 32
W. F. McClure

BOTANY

Characterization of Meristem Morphogenesis in Response to Changes in Environment and Age 41
Judith F. Thomas

Limited Growth of Metabolic Sinks to Enhance Quality of Flue-Cured Tobacco 42
H. Seltmann

CROP SCIENCE

Investigations in Tobacco Transplant Production 51
R. C. Long

Tobacco Breeding and Genetic Research 58
James F. Chaplin

Burley Tobacco Breeding and Genetics 63
Rebeca C. Rufty

Tobacco Breeding for Germplasm and Varieties Resistant to Pests and Advantageous to Health 65
G. R. Gwynn

Genetic Investigation of Tobacco and the Nicotiana Species 68
V. A. Sisson

2000269649

Source: https://www.industrydocuments.ucsf.edu/docs/qsyk0000

	Page
Development and Evaluation of New Sources of Nicotiana Germplasm ..... Sandra M. Reed	72
Varietal Evaluation Studies in Flue-Cured Tobacco ..... Daryl Bowman	76
Characterization of Flue-Cured Varieties ..... W. W. Weeks	79
Effective and Efficient Weed Management Programs for Corn, Tobacco, Small Grains and Sorghum ..... A. D. Worsham, R. L. Davis, R. F. Walls, Richard Lemons and Deidre DeBruhl	83
Vegetation Control in No-Tillage Crop Production ..... A. D. Worsham, R. L. Davis, R. F. Walls, Richard Lemons and Deidre DeBruhl	88
Nicotiana tabacum Carbohydrate Biochemistry ..... David Danehower	127
Regulation of Carbon and Nitrogen Assimilation in Tobacco ..... Thomas W. Rufty, Jr.	131
Burley Tobacco On-Farm Tests ..... R. L. Davis	134
ECONOMICS AND BUSINESS	
Explanation of Size Distribution of Farms: Economic Models and Empirical Applications	140
Analysis of Demand for Tobacco and Tobacco Products ..... Daniel A. Sumner	142
Analysis of International Trade Restrictions ..... Paul R. Johnson	144
ENTOMOLOGY	
Tobacco Insect Control ..... Emmett P. Lampert	145
Management Strategies for Tobacco Insect Pests ..... D. Michael Jackson	156
Pesticide Residues in Tobacco, Tobacco Products, and Main-Stream Smoke . T. J. Sheets	162
GENETICS	
Genetic Investigations in Nicotiana Species Populations ..... E. A. Wernsman and D. F. Matzinger	165

2000269650

Source: https://www.industrydocuments.ucsf.edu/docs/qsyk0000

Page

PLANT PATHOLOGY

Cell Culture Techniques for the Development of Disease Resistance in Tobacco 176
Margaret E. Daub

Epidemiology and Control of Virus Diseases of Solanaceous Crops 181
G. V. Gooding, Jr.

Soilborne Diseases of Tobacco 184
H. D. Shew

Effects of Water Stress on Expression of Host Resistance to a Phytophthora sp. 187
H. D. Shew

Studies on Plant Disease Control, Tobacco Diseases 188
Harvey W. Spurr, Jr.

Epidemiology and Control of Foliar Diseases of Tobacco 191
C. E. Main

Disease Control Strategies for Burley Tobacco and Vegetables in Western North Carolina 202
P. B. Shoemaker

SOIL SCIENCE

Plant Bed and Field Management of Flue-Cured Tobacco 204
G. S. Miner

Effects of Selected Soil Physical Properties and Subsoiling on Root Growth and Crop Yield Response 208
M. J. Vepraskas

Effects of Selected Soil Management Systems on Erosion, Water Conservation and Plant Growth Conditions 210
D. K. Casel, C. B. McCants, and G. R. Bathke

Environmental Determinants of Crop Growth and Soil Productivity 211
C. D. Raper, Jr.

Cultural, Nutritional and Varietal Investigations with Burley Tobacco .. 215
J. E. Shelton

Cover Crop Evaluation and No-Till Crop Production on Mountain Soils of North Carolina 217
G. D. Hoyt

TOBACCO LITERATURE SERVICE

Annual Report for the Calendar Year 1984 219
Pamela Puryear and Paul Suhr

ADDENDUM 220

2000269651

Source: https://www.industrydocuments.ucsf.edu/docs/qsyk0000

Title: NC 03551 Action of Ethylene on Tobacco Plants and Tissues

Project Leader: Edward C. Sisler

I. Summary of Research:

This project has the following objectives:

A. To study the chemical parameters of ethylene activity.

B. To purify the ethylene-binding site to homogeneity.

Studies on the action of ethylene on plant tissues have continued. In a model system using abscission, the effect of ethylene was reversed by the anti-ethylene 2,5-norbornadiene.

This compound can reverse the action of ethylene, by interacting with the binding site, but failing to induce the response. The kinetics of this process have been worked out and compared with the normal case. The enzymes cellulase and polygalacturonase are (apparently) induced by ethylene. These enzymes are suppressed by auxin (2,4-D), and the question remains as to whether the effect of ethylene is on the genome, allowing transcription of new genetic information, or whether the action is on controlling the auxin levels. As the auxin level is decreased, the enzymes may be transcribed without direct action of ethylene. An attempt was made to determine if preventing the response by adding both auxin (2,4-D) and 2,5-norbornadiene was additive. The combination was more effective than either alone, suggesting a more complex relationship.

Experiments are now being conducted to determine whether or not enzymes in tobacco leaves normally associated with ripening, such as chlorophyllase and phenylalanine ammonia lyase, and are induced by ethylene are really being controlled by another plant hormone, such as indole-3-acetic acid. These experiments should give some insight on how to better control the ripening process.

Experiments have also continued on the purification of the ethylene-binding component. The use of immobilized ampholines has been made; however, the results are still preliminary. The increase in high voltage to 5000V should allow for a substantial purification, once the details are worked out and the proper conditions are achieved.

IV. Publications:

Sisler, E. C., M. S. Reid, and D. W. Fugino. 1983. Investigation of the mode of action of ethylene in carnation senescence. Acta Hort. 141:229-234.

Sisler, E. C., and S. F. Yang. 1984. Ethylene, the gaseous plant hormone. (An invited review) Bioscience 34:234-238.

2000269652

Source: https://www.industrydocuments.ucsf.edu/docs/qsyk0000

Sisler, E. C. 1984. Distribution and properties of ethylene-binding component from plant tissue. In Ethylene--Biochemical, Physiological and Applied Aspects (Yoram Fuchs and Edo Chalutz, eds), pp. 45-54. Martinus Nijhoff/Dr. W. Junk Publishers, The Hague.

Goren, R., and E. C. Sisler. 1984. Ethylene binding: some parameters in excised tobacco leaves. Tobacco Sci. 28:110-115.

Sisler, E. C., and S. F. Yang. 1984. Anti-ethylene effects of cis-2-butene and cyclic olefins. Phytochemistry 23:2765-2768.

Sisler, E. C., R. Goren, and M. Huberman. 1985. Effect of 2,5-norbornadiene on abscission and ethylene production in citrus leaf explants. Physiol. Plant. 63:114-120.

III. Manuscripts Accepted for Publication:

Goren, R., and E. C. Sisler. 1985. Ethylene-binding characteristics in Phaseolus, Citrus, and Ligustrum plants. Plant Growth Regul.

Beggs, M. J., and E. C. Sisler. 1985. Binding of ethylene analogs and cyclic olefins to a Triton X-100 extract from plants: comparison with in vivo activities. Plant Growth Regul.

V. Abstracts:

Sisler, E. C., R. Goren, and M. Huberman. 1984. Effect of 2,5-norbornadiene on citrus leaf explants. Plant Physiol. 75:S-127.

I. Summary

The adv
many resea
farmers to
trays to gr
mechanizatio

There
available
conducted
containers
and seedling
automated se

The 1
emergence fr
the solar b
growth and y
the Univers
superior gre
Japanese tra
yield.

Materials an

Both s
systems des
Germination
transplant
for fully au
States for g
(commonly us
respectively
University,

Commerc
Inc. (Los
diameter of
seeder devel

Convent
About 3 g of
and uniformly
16, 1984. T

2000269653

Source: https://www.industrydocuments.ucsf.edu/docs/qsyk0000

BIOLOGICAL AND AGRICULTURAL ENGINEERING

NC 05540: AUTOMATED TRANSPLANT CULTURING AND TRANSPLANTING IN TOBACCO PRODUCTION

B.K. Huang, Project Leader

I. Summary of Research:

The advantages of container-grown transplants have been well recognized by many researchers and some farmers. In 1984 several North Carolina tobacco farmers took on their own initiative to purchase greenhouses and container trays to grow their own containerized transplants to facilitate total cultural mechanization and to improve tobacco quality.

There are may types, shapes, and sizes of containers or trays are available for seedling culture. However, very few studies have been conducted to evaluate the germination and growth performance of those containers or trays. Continuing efforts were made to study the germination and seedling growth for selected types of transplant culturing trays using the automated seedling production systems in a greenhouse solar system.

The 1984 test results showed that germination rate was 95-97% and the emergence frequency was excellent under the controlled environment provided by the solar barn, that the greenhouse transplants were in general superior in growth and yield as compared to conventional bare root transplants, and that the University tray designed for the fully automated transplanter provided superior greenhouse and field growth as compared to the most popular U.S. and Japanese trays but there was no significant difference among the tray types in yield.

Materials and Methods

Both stationary layer and rotary layer automated transplant production systems described in the previous reports were used in this investigation. Germination and growth studies were conducted for three selected types of transplant culturing trays, the University (developed at N.C. State University for fully automated transplanting), the Speedling (commonly used in the United States for growing tobacco transplants and other seedlings), and the Japanese (commonly used by Japanese tobacco farmers) types. Figures 1(a), (b) and (c) respectively illustrate the shape and size of an individual cell of the University, Speedling and Japanese trays.

Commercially available McNair 944 tobacco seeds were sent to Germain's Inc. (Los Angeles, CA) for coating to obtain the coated seeds with average diameter of 1.78 mm so that they could be seeded with an automatic precision seeder developed at N.C. State University.

Conventional plantbed was prepared at the Central Crops Research Station. About 3 g of McNair 944 tobacco seeds were uniformly mixed with Sodium Nitrate and uniformly hand sown over 6.97 m^2 (75 ft^2) plantbed three times on February 16, 1984. The plantbed was then covered with pine straw and nylon sheet.

2000269654

Source: https://www.industrydocuments.ucsf.edu/docs/qsyk0000

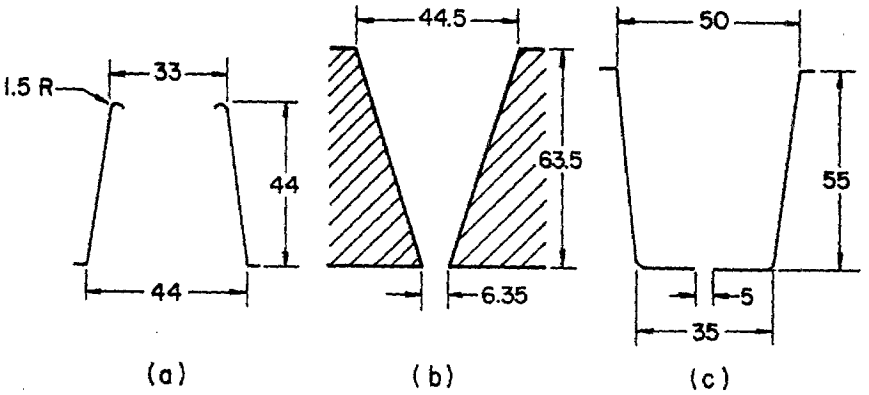

Fig. 1. Individual cell shape and size (mm) for (a) University; (b) Speedling; and (c) Japanese trays.

Sprinkler irrigation was used over the plantbed depending on weather conditions.

The germination and growth studies of containerized seedlings were conducted in the solar barn at N.C. State University campus. The trays were filled with moisted PRO-MIX (Premier Brands, Inc., New Rochelle, NY) using an automatic tray filler. The coated seeds were seeded with a precision automatic seeder to put a single seed on each tray cell at one time. Seeded trays were laid on the perforated metal layers of stationary and rotary systems. Three seeding dates 2/23/84, 3/1/84 and 3/8/84, respectively 7, 14 and 21 days or 1, 2 and 3 weeks after the seeding of the conventional plantbed, were used to study the seed germination and transplant growth in the solar barn as well a to study the field growth dynamics of various transplant dates. Watering system operated from 8:00 AM to 6:00 PM, misting 50 s every 40 min for the stationary system and misting 2.5 min during the periodic rotation every 2 h for the rotary system so that both systems provided about the same amount of watering per day. During cloudy or rainy days the watering intervals were extended 2-3 times to reduce the amount of watering. The daytime and nighttime air temperatures were respectively set for 32°C and 20°C to provide optimum growth environment.

Field growth dynamics of the containerized seedlings and conventional bare-root seedlings were studied from transplanting to harvesting in the Central Crops Research Station. The test area was divided into 3 blocks, and

each b
(22") ir
row dist
block.
(Table 1
At the
selected
large
transpla
in this
clipped
less tra

For
taken du
second an
In the fi
acre was
analyzed
transplan

Year

1984

Results and

Results
frequency u
among the t
production
obtained in

2000269655

Source: https://www.industrydocuments.ucsf.edu/docs/qsyk0000

each block was divided ito 15 rows to plant 22 tobacco plants at 55.88 cm (22") intervals including two protective plants at the ends of each row. The row distance was 114.3 cm (45") with two protective rows at both sides of each block. Each block was assigned to one of the planting dates. Five treatments (Table 1) with 3 replications were randomly assigned to 15 rows in each block. At the time of transplanting, the containerized transplants were randomly selected from a tray for hand transplanting, but for the conventional method large uniform bare-root transplants were carefully selected for hand transplanting. For the third planting conventional bare-root transplants used in this experiment were clipped once in the plantbed. It has been shown that clipped transplants tend to be more uniform and thicker-stemmed, resulting in less transplant shock, less premature flowering and more yield.

For the containerized seedlings germination and leaf number counts were taken during the transplant culturing in the solar barn. In 1984 the first, second and third transplanting dates were respectively April 26, May 3 and 10. In the field study plant growth in stem diameter as well as yield in pound per acre was measured. The growth data and total yield data were statistically analyzed for each treatment, tray type, production method, seeding time, and transplanting time.

TABLE 1. TRANSPLANT SOURCE (TREATMENT) AND SYMBOLS

Year	System		Tray	Delay (days)	Symbol
1984	Greenhouse	Stationary	University	7	SU 7
				14	SU 14
				21	SU 21
		Rotary	University	7	RU 7
				14	RU 14
				21	RU 21
			Speedling	7	RS 7
				14	RS 14
				21	RS 21
			Japanese	7	RJ 7
				14	RJ 14
				21	RJ 21
	Conventional (clipped once for the 3rd planting)-				C

Results and Discussion

Results showed that germination rate was 95-97% with excellent emergence frequency under the controlled environment with no significant difference among the tray types, between rotary and stationary layer automated seedling production systems. These results were in good agreement with the results obtained in 1983. The root formation of transplants from three types of tray

2000269656

Source: https://www.industrydocuments.ucsf.edu/docs/qsyk0000

cells are significantly different as described in the 1984 report. The overall plant size was largest for the University, medium for the Japanese, and smallest for the Speedling. Table 2 shows the average leaf area of transplants from various trays measured at the transplanting time.

TABLE 2. AVERAGE LEAF AREA OF TRANSPLANTS FROM VARIOUS TRAYS (1984).

System	Tray	Leaf Area (cm^2)		
		1st Planting	2nd Planting	3rd Planting
Stationary	University	193.6	246.1	200.6
Rotary	University	199.0	217.0	202.3
	Speedling	70.6	84.0	41.8
	Japanese	147.0	161.5	149.8

Growing tobacco transplants under the controlled environmental condition in the solar barn allows faster seedling growth as compared to the conventional plantbed, and therefore, the total transplant growth period under the controlled environment is 2 to 3 weeks shorter than that of conventional plantbed. In 1984 the containerized seedlings were again ready for transplanting in 8 weeks, however, the conventional plantbed seedlings were too small to transplant on April 19, 1984. Therefore, transplanting date were delayed one week for all planting dates. Containerized plants' size variability on a tray was non-significant, and therefore, the containerized seedlings transplanted for field study were selected randomly from each tray.

The cost estimate to produce 1 acre of transplants in the solar barn was $59.6 in 1984 for the growth period of 9 weeks ($52.98 for 8 weeks) including seeds, seed coating, soil mix, trays, electricity, and heating oil as compared to $44 per acre for conventional practice including seeds, fertilizers, fumigation, and plantbed cover.

The effects of various treatments could be observed for about a month after transplanting, however, the difference became less noticeable as the plants grew older. Therefore, continuous quantitative measurement of plant growth is indispensable for the comparative growth and yield study of various treatments. The stem diameter data for the first, second and third plantings are respectively shown in Figs. 2, 3 and 4. The field growth curves show that in general all containerized transplants display similar growth performance for all three plantings. In spite of the smaller initial size at the time of transplanting all containerized transplants exceeded the conventional transplants in 10 weeks for the first planting and in 7 weeks for the second planting. Figure 4 indicates that the large clipped conventional transplants grew considerably better in the first 8 weeks, however, most the containerized transplants exceeded the conventional transplant by the topping time. The

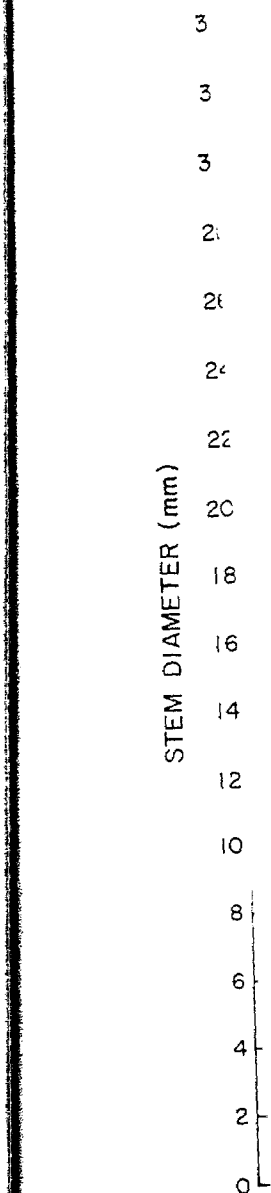

2002069657

Source: https://www.industrydocuments.ucsf.edu/docs/qsyk0000

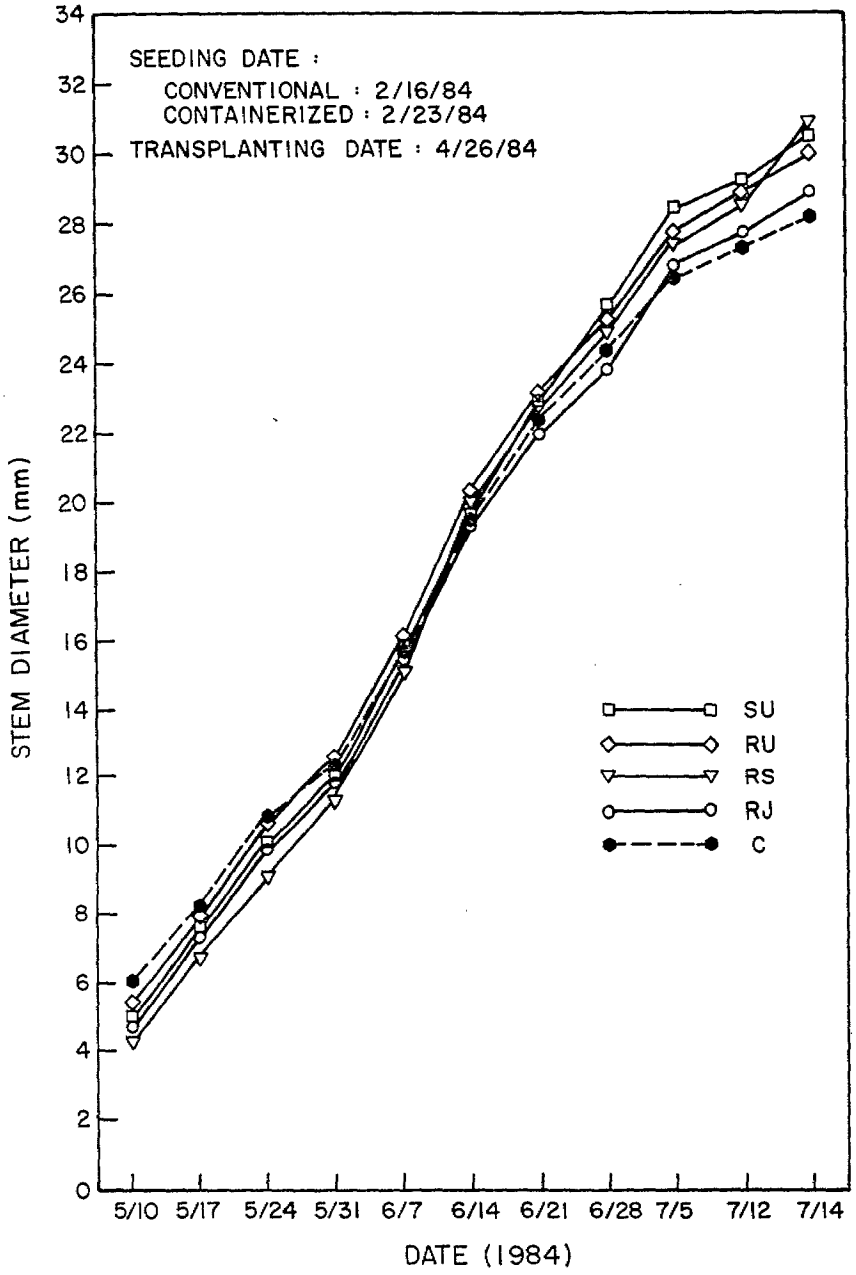

Fig. 2. Field growth comparison for the first planting (4/26/84).

2000269658

Source: https://www.industrydocuments.ucsf.edu/docs/qsyk0000

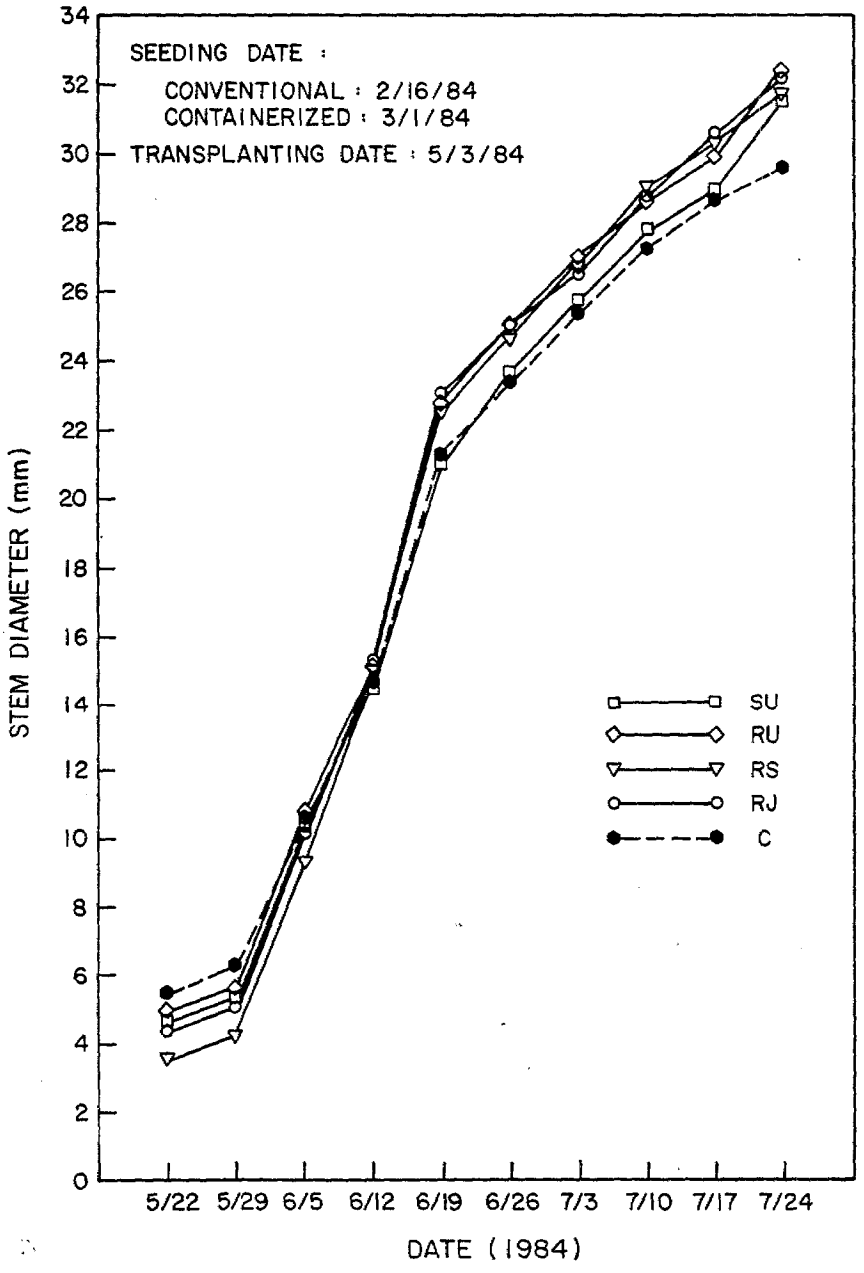

Fig. 3. Field growth comparison for the second planting (5/3/84).

2000269659

Source: https://www.industrydocuments.ucsf.edu/docs/qsyk0000

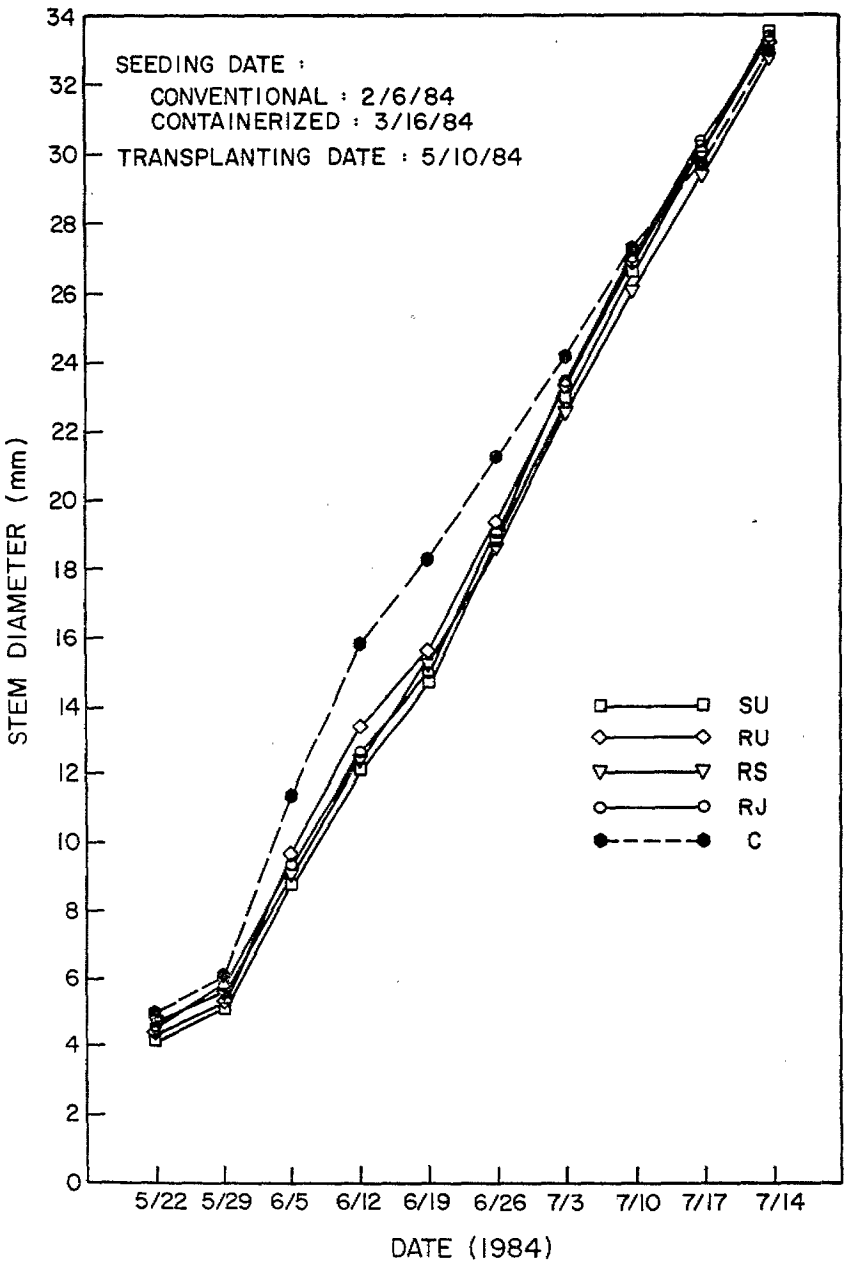

Fig. 4. Field growth comparison for the third planting (5/10/84).

2000269660

Source: https://www.industrydocuments.ucsf.edu/docs/qsyk0000

data for flowering dates indicate that the percentage of premature flowing is considerably higher for the conventional transplants than for the containerized transplants for all three plantings.

TABLE 3. YIELD OF TOBACCO.

System	Tray	Yield kg/m^2 (lb/acre)		
		1st Planting	2nd Planting	3rd Planting
Greenhouse				
Stationary	University	0.2834(2529)	0.2838(2533)	0.2857(2549)
Rotary	University	0.3090(2757)	0.3007(2683)	0.2903(2590)
	Speedling	0.2928(2612)	0.3278(2925)	0.2867(2559)
	Japanese	0.2946(2629)	0.3166(2825)	0.2940(2623)
Conventional	-	0.2847(2540)	0.2783(2483)	0.2919(2605)

Table 3 shows the yield of tobacco for various treatments. Analysis of the data indicated that the overall yield per acre for the containerized transplants exceeded the conventional transplants by 4.4% with the highest difference in the second planting exceeding 10.4%. In general rotary system resulted in higher yield than stationary system. There was no significant difference among the tray types in yield. The yield was highest for the University in the first planting, highest for the Speedling for the second planting and highest for the Japanese for the third planting.

Table 4 shows the earnings of tobacco based on 1984 price index for untied flue-cured tobacco. The result indicated that the containerized transplants exceeded conventional bare-root transplants in earnings by 4.56%, exceeding 12.71% in the second planting. There was no significant difference among the tray types in earnings. The earning was highest for the University for the first planting, highest for the Speedling for the second planting, and highest for the Japanese for the third planting. The highest unit price obtained was $1.79/lb for the University with rotary system.

The germination and greenhouse growth data and the field growth and yield data of both 1983 and 1984 further confirm the advantages of applying the advanced technology in tobacco culture practice to overcome the current bottleneck in the total mechanization, to conserve energy, and to improve the quality and yield in tobacco production.

2000269661

Source: https://www.industrydocuments.ucsf.edu/docs/qcyk0000

TABLE 4. EARNINGS.

System	Tray	Earnings $/m^2 ($/acre)		
		1st Planting	2nd Planting	3rd Planting
Greenhouse				
Stationary	University	1.12(4518)	1.11(4488)	1.13(4567)
Rotary	University	1.20(4838)	1.19(4829)	1.16(4706)
	Speedling	1.16(4681)	1.30(5264)	1.12(4527)
	Japanese	1.06(4305)	1.27(5121)	1.18(4790)
Conventional	-	1.09(4418)	1.08(4370)	1.17(4753)

2000269662

Source: https://www.industrydocuments.ucsf.edu/docs/qsyk0000

II. Graduate Students in Tobacco Related Research:

None

III. Post-Doctoral Fellows and Visiting Scholars:

Dr. Akira Kato, Senior Researcher, The Japan Tobacco & Salt Public Corp.

IV. Publications:

Huang, B.K. and A. Nassar. 1984. Environmental control of greenhouse solar system for automated hydroponic culture. International Federation of Automatic Control, A Bridge Between Control Science and Technology. Vol. 1:260-265.

Huang, B.K. 1984. Drying, storing, and seedling production system. Patent No. 1213322. Japan Patent Bureau, Tokyo, Japan. June 27, 1984.

V. Manuscripts Accepted for Publication:

Behroozi-Lar, M., B.K. Huang and H.D. Bowen. Circuit simulation of soil temperature profile.

VI. Manuscripts in Review:

Huang, B.K. and N.M. El-Shaik. Simulation analysis of greenhouse solar drying system for peanuts and grains.

Huang, B.K., M. Toksoy and Y.A. Cengel. Transient response of latent-heat storage in greenhouse solar system.

Huang, B.K. and C.G. Bowers, Jr. Development of greenhouse solar system for bulk tobacco curing and plant production.

Huang, B.K. and H.S. Chang. Circuit simulation analysis of heat transfer effect in solar drying.

Huang, B.K., C.S. Su, R. Takeuchi and Y.R. Chen. Noise attenuation characteristics of plant systems.

VII. Papers Presented at Professional Meetings:

Kato, A. and B.K. Huang. Network modeling and simulation of greenhouse solar system. Fifteenth Annual Pittsburgh Conference on Modeling and Simulation. Pittsburgh, PA, Apr. 19-20, 1984.

Huang, B.K. and A. Kato. Dynamic simulation of greenhouse thermal behavior. ASAE 1984 Summer Meeting, Knoxville, TN, June 24-27, 1984

Kato, A. and B.K. Huang. Mechanized tobacco transplant culturing and transplanting in greenhouse solar system. ASAE 1984 Summer Meeting, Knoxville, TN, June 24-27, 1984.

Huang, B.K. and A.H. Nassar. Environment control of greenhouse solar system for automated hydroponic culture. 9th World Congress of the International Federation of Automatic Control. Budapest, Hungary, July 2-6, 1984.

Huang, B.K. Solar energy utilization in bulk-curing/greenhouse systems. 1984. International Conference on Agricultural Technology, Washington, D.C., July 23-27, 1984.

NC 03801:

I. SUMMAR

This
Station.
cover type
undercutti

Seeding Me
by inappro
company (R
for greenh
results, e
passing th
problem.

Seed Treat
to germina
monitor ge
repeated r
optimal co
was circum
randomized
germinated
uniformly.
DPI treatm

Cover Type:
dealt with
fluid drill
combinatio
interaction
seeds under
perforated
time, the f
seeds under
due to coat
plastic. G
perforated
causing ano
for pellete

Sequen
follows:
by solid pl

2000269663

Source: https://www.industrydocuments.ucsf.edu/docs/qsyk0000

NC 03801: IMPROVED SYSTEMS FOR TRANSPLANT PRODUCTION AND DIRECT SEEDING OF TOBACCO

C. W. Suggs, Project Leader
S. C. Mohapatra, Co-Project Leader

I. SUMMARY OF RESEARCH:

A. FIELD TRIALS ON MECHANIZED TRANSPLANT PRODUCTION

This research was conducted at the Lower Coastal Plains Tobacco Research Station. Experimental variables tested were: seeding method, seed treatment, cover type, fertilizer rate, clipping, undercutting, clipping and undercutting, and plantbed temperature.

Seeding Method: Precision seeding of pelleted seeds were again handicapped by inappropriate pelletization method. Discussion with the collaborating company (Royal Sluis Co.) revealed that the pellets were originally designed for greenhouse production of transplants. Fluid-drilling gave excellent results, except that certain seeds were found to be partially damaged while passing through the pump. Procedures will be developed to minimize this problem.

Seed Treatment: Dark preincubation (DPI) treatment was tested with respect to germination rate and uniformity of the stand. Previous attempts to monitor germination rate under field condition was hampered by the fact that repeated removal of the cover from the same plantbed altered the natural and optimal conditions for seed germination and seedling growth. This problem was circumvented by using large number of minibeds according to a completely randomized statistical design. As expected, DPI treated seeds not only germinated faster than the untreated seeds, but they also germinated more uniformly. This was reflected in smaller variability in stem diameter for DPI treatment than the control.

Cover Type: These tests were conducted under two categories. The first dealt with comparison of perforated and solid plastic in conjunction with fluid drilling and precision seeding, and the second dealt with sequential combination of cover types. There was a significant cover x seeding method interaction. Stem diameter was larger for pelleted seeds than fluid-drilling seeds under solid plastic cover; but the results were opposite under perforated plastic. In absence of exact physiological explanations at this time, the following speculations are offered. Better performance of pelleted seeds under solid plastic might have resulted from their greater tolerance, due to coating, than uncoated seeds to thermal stress resulting from solid plastic. Conversely, local flooding due to water penetration through the perforated plastic might promote germination of unpelleted seeds while causing anoxia, due to initial binding of water to the pelleting material, for pelleted seeds.

Sequential combination of various cover types was accomplished as follows: 1) cotton used continuously, 2) solid plastic with shading followed by solid plastic removal on April 19, 3) perforated plastic with shading

2000269664

Source: https://www.industrydocuments.ucsf.edu/docs/qsyk0000

followed by perforated plastic removal on April 19, 4) solid plastic with shading followed by punching of solid plastic on April 4 and removal of the punched plastic on April 19, 5) solid plastic with shading followed by replacement of solid plastic with remay on April 11, 6) solid plastic with shading followed by replacement of solid plastic with cotton on April 11. For all of the above seeding was done on Feb. 9, final cover removal was done on April 30, and first transplant pulling was done on May 2. Measurement of progressive change in leaf area showed that solid plastic with later perforation resulted in a steady increase in leaf area throughout seedling growth period whereas other combinations of covers resulted in to fast or too slow leaf growth. However, regardless of cover combination, little or no leaf growth was detectable until after 62 days following seeding.

Fertilizer Rate: Results with two fertilizer rates were inconclusive because a relationship seemed to exist between fertilizer rate and cover type used. This aspect will be investigated further in the subsequent years.

Clipping and Undercutting Plantbeds: Plant growth can be retarded by clipping off part of the leaf material. This also reduces shading and allows the smaller plants to compete better so that a larger proportion of the plants will be in a given size range. Plants can be clipped several times.

Undercutting at a depth of 1 to three inches below the ground surface significantly modifies the root environment, retards growth and decreases the shoot to root ratio, Table 1. Clipping, undercutting and combinations of the two restricted length of the plant stem but did not appreciably reduce diameter. Root weight did not decrease with clipping or undercutting but shoot weight did, hence the decrease in the shoot to root ratio.

Yield, price and value, Table 2, were not significantly affected by the treatments, however, the yields and values of all except one of the clipped or undercut plant plots were numerically higher than the check.

Transplanting mortality was low in all plots because of favorable weather and soil moisture.

Table 1. Effect of clipping and undercutting on seedling characteristics.

	Normal	Clip 1	U Cut 1	Clip 1 U Cut 1	Clip 2	U Cut 2	Clip 2 U Cut 2
Tot Length, cm	28.2	21.7	23.2	20.8	20.2	18.7	15.4
Stem Length, cm	12.8	10.7	9.5	10.2	8.4	6.9	5.2
Stem Dia, cm	.555	.526	.527	.543	.505	.496	.461
Root wt, gm	.90	.99	.81	.90	.73	1.09	.83
Shoot wt, gm	13.6	10.1	9.4	8.4	8.5	6.9	5.04
Shoot wt/Root wt	15.1	10.2	11.6	9.3	11.6	6.3	6.1

Table 2.

lb/A
$/lb
$/A

Effect of
plants are
of those r
Plants gro
suffer leas
conditions
value are

Table

Roots

Norma
Dia.
Dia.
Dia.
Small
Large
Spind
Small

Respiratory
morphologic
respiration
inhibitors
that alter
of germinat
development
presence of

Development
the characte
of autotro

2000269665

Source: https://www.industrydocuments.ucsf.edu/docs/qsyk0000

Table 2. Effect of clipping and undercutting on yield, price and value.

	Normal	Clip 1	U Cut 1	Clip 1 U Cut 1	Clip 2	U Cut 2	Clip 1 U Cut 2
lb/A	2736	2870	2842	2808	2863	2698	2879
$/lb	1.78	1.80	1.80	1.79	1.79	1.78	1.79
$/A	4885	5162	5112	5031	5125	4789	5154

Effect of Plant Size and Root Condition on Yield Price and Value: When plants are pulled from the plantbeds many of the roots are broken off and many of those remaining on the plant have their contact with the soil disrupted. Plants grown in containers and transplanted with intact roots appear to suffer less shock and grow off faster. However, when weather and soil conditions are favorable during transplanting, the yield, price and crop value are not decreased except for very small plants, Table 3.

Table 3. Effect of plant size and root condition on yield, price and value.

Roots	lb/A	$/lb	$/A
Normal Pulled	2572	1.72	4424
Dug, 2" x 2" Square	2531	1.70	4302
Dug, Shaken	2605	1.72	4485
Dug, Washed	2579	1.71	4410
Small, 2 x 2 Square	2561	1.73	4426
Large, Pulled	2567	1.71	4378
Spindley, Pulled	2621	1.72	4504
Small Pulled	2404	1.70	4092

B. LABORATORY STUDIES ON SEED PHYSIOLOGY

Respiratory Physiology: Although tobacco seeds do not exhibit any morphological change during the first 72 hours of imbibition, they start respiration within hours of seed wetting. Through the use of specific inhibitors such as benzyhydroxamic acid and potassium cyanide it was observed that alternate respiration path plays a major role during the first 48 hours of germination whereas normal respiration is present throughout seedling development. These results were confirmed through germination data in the presence or absence of the above mentioned inhibitors.

Development of Foliage Leaf: Research during the past years was dedicated to the characterization of morphological changes associated with the first phase of autotrophic transition, i.e., development of the cotyledonary leaves.

2000269666

Source: https://www.industrydocuments.ucsf.edu/docs/gsyk0000

However, true autotrophy of the developing seedling does not commence until the development of foliage leaves. Therefore, the latter was monitored with respect to morphological changes. An increasing order of leaf size was observed between the first and the fourth leaf. Since this is contrary to expected developmental pattern, because the older leaves are normally larger than the younger leaves, the physiological significance of this reverse morphology will be investigated in subsequent years. With regard to foliage leaf development, it was further noticed that although the seedling did not have any difficulty to form fully developed cotyledonary leaves in distilled water only, no foliage leaf was visible until sufficient light and inorganic nutrition was supplied. Light intensity was particularly limiting in that at least 700 $Ecm^{-2}sec^{-1}$ was needed for initiation and expansion of foliage leaves.

Stress Physiology: Experiments conducted during 1983-84 were repeated to test reproducibility of results. It was confirmed that tobacco seeds imbibed for up to 48 hours can be dried without causing any moisture stress. However, susceptibility to moisture stress increased dramatically as imbibition proceeded in that seeds in the radicle stage (i.e., 96 hours after wetting) experienced irreversible damage even after 1/2 hour of drying on filter papers. In the soil, however, the seed demonstrated much greater tolerance to moisture deficiency probably because of the presence of residual moisture which helps maintain the physiological state of the germinating seed.

II. GRADUATE STUDENTS

1. S. M. Raju: Ultrastructural and biochemical physiology of the tobacco leaf

2. M. Y. Chiang: Stress physiology of tobacco seedling development

III. POSTDOCTORAL FELLOW:

1. Dr. B. Mohanty

V. MANUSCRIPTS ACCEPTED FOR PUBLICATION:

1. Mohapatra, S. C. and W. H. Johnson. Measurement of whole seed respiration through dissolved oxygen polarography. (Seed Science and Technology).

VI. MANUSCRIPTS IN REVIEW:

1. Mohapatra, S. C. and W. H. Johnson. A thermogradient incubator for seed germination studies.

2. Mohapatra, S. C., J. Arcila, W. H. Johnson, and L. A. Nelson. Improvement of tobacco seed germination synchrony through dark preincubation treatment.

2000269667

Source: https://www.industrydocuments.ucsf.edu/docs/qsyk0000

VII. PAPERS PRESENTED AT PROFESSIONAL MEETINGS

S. C. Mohapatra. Comparison of extraction methods of tobacco seed total lipid. Proc., The 38th Tob. Chem. Res. Conf., Atlanta, GA, Nov. 5-8, 1984, pp. 23.

S. C. Mohapatra, C. W. Suggs and L. A. Nelson. Progress in mechanization of tobacco transplant production in North Carolina. The 31st Tob. Workers' Conf., Pinehurst, NC, Jan. 7-10, 1985.

C. W. Suggs and S. C. Mohapatra. Effects of transplant size, clipping, undercutting and root mass on survival growth, and performance. The 31st Tob. Workers' Conf., Pinehurst, NC, Jan. 7-10, 1985.

C. W. Suggs and S. C. Mohapatra. Developments in mechanical harvesting of seedlings and automatic transplanting. The 31st Tob. Workers' Conf., Pinehurst, NC, Jan. 7-10, 1985.

S. C. Mohapatra. When is fertilizer needed by the developing tobacco seedling? The 31st Tob. Workers' Conf., Pinehurst, NC, Jan. 7-10, 1985

IX. ACKNOWLEDGEMENTS:

Research conducted during the reporting period was partially funded by the Philip Morris USA, Richmond, VA and R. J. Reynolds Co., Winston-Salem, NC. Technical assistance were provided by S. M. Leary, S. H. Bland, Bill Barney, James Gore, and Valsa Samuels. Secretarial assistance was provided by Ann Griffin and Brenda Mason.

2000269668

Source: https://www.industrydocuments.ucsf.edu/docs/qsyk0000

Title: NC 03804 Mechanization of Tobacco Production

Project Leaders: C.W. Suggs and R.W. Watkins

I. Summary of Research:

Project Objectives:

A. To increase production efficiency by decreasing requirements for labor, energy and other inputs.

A. Machine Harvested Versus Hand Harvested Leaf.

Market acceptance of machine harvested and hand harvested tobacco was farm tested in 1984. Similar leaf for each test was harvested from the same field on the same day and cured in the same barn in the same type bulk racks. Four cures or tests involving lugs through tips were conducted revealing a 1 1/4 cents per pound overall preference for the hand primed leaf.

B. Seedling Harvester and Automatic Transplanter for Bare Root Seedlings.

Stand establishment is the one major tobacco production area for which mechanization technology is not yet available. A significant proportion of the project effort is now being directed toward evaluation and eventual solution of this problem.

During 1984 we built a machine for digging and stitching rows of seedlings from field plant beds which had been planted with pelleted seed in rows about 15 cm apart. The machine consisted of an undercutting-digging blade short enough for one row of plants, a pair of belts to grip and lift the plants and a combination taper-stitcher which fed a line of paper tape on each side of the plant tops and then stitched through them to secure the plants in a strand, Fig. 1.

2000269669

Source: https://www.industrydocuments.ucsf.edu/docs/qsyk0000

The line of stitched plants is the input stage for the automatic transplanter, Fig. 2. The line of plants is fed by means of a pair of downwardly inclined belts to the furrow opening. Feed is stopped when the plant stem trips a microswitch just before it is ejected into the furrow. Feed is resumed when another microswitch on the transplanter wheel makes contact after moving forward one plant space. Machine components are driven by a solenoid valve controlled hydraulic circuit.

Field tests of both the digger and transplanter were conducted during 1984. Results to date indicate that the machines have potential but that more research is needed. One of the advantages of this approach is that it utilizes bare root plants which the farmers are experienced in producing.

C. Automatic Transplanter for Intact Root Seedlings.

In addition to the work on intact seedlings at several universities, there has been some progress by several, mostly foreign, commercial firms. Powell Manufacturing Co. of Bennettsville, S.C. has an automatic transplanter under development. In addition the project has a transplanter on order from Finland which will be modified to accommodate tobacco seedlings.

In this approach the plants are grown in paper honey comb shaped cells having a degradable glue line which allows them to unfold on the transplanter into a line of plant container cells, Fig. 3. This line is fed between a pair of feed rollers to a pair of acceleration rollers which breaks the perforation between plants and throws the plant into a drop chute through which it falls into the opened furrow. Press wheels close the furrow and

2000269670

Source: https://www.industrydocuments.ucsf.edu/docs/qsyk0000

firm the plant into the ground. We expect to test one of these machines in 1985.

This approach requires that plants be grown in containers, perhaps in a greenhouse. The required technology is now available, pretty well tested and some farmers have gained some experience with it. The advantages and trade offs between cost, labor requirements, plant quality, environmental control and growth prediction have not yet been established.

D. Burley Mechanization

Results from three years of field investigations indicate that priming the lower 1/4 to 1/2 of the leaves of burley plants followed by stalk harvesting result in modest (statistically insignificant) increases in crop value in most seasons and that decreases in crop value are unlikely to occur. Priming of 3/4 to 4/4 of the leaves followed by stalk harvest gave mixed results. Additional work with the mechanical priming machine on a special grown burley crop at Clayton gave priming efficiencie approximately equal to flue-cured results.

This work, along with bulk curing work at Oxford indicates that burley can be successfully machine harvested and bulk cured and that priming does not result in a decrease in crop value. Thus, it appears that the labor saving technology developed for flue-cured can be adapted for burley where acreages are sufficient to justify the machinery investment.

E. Air Flow Resistance Through Fresh Leaves and Plants

Random Leaf The flow responses in terms of superficial velocity (air speed in the column above the leaves) versus pressure per unit of depth for

2000269671

Source: https://www.industrydocuments.ucsf.edu/docs/qsyk0000

random (unaligned) tobacco leaves packed to densities of 183, 240, and 300 kg/m^3 (11.4, 15.0, 18.8 lb/f^3) are shown in Fig. 4. There is the expected decrease in flow with increases in density and a progressive increase in the slope from 0.666 for the lowest density, 0.766 for the intermediate density to 0.884 for the highest density, Table 2. Correlation coefficients, r^2, were high, ranging from .937 to .978. Depth affected flow in a linear manner so that division of the static pressure across the mass of leaves by the depth normalized the results causing all depths fell virtually along the same line.

Table 1. Yield, Value and Price for Partially Primed Air Cured Burley Tobacco.

			CWS 1984 Crop Waynesville		
	1984			1983	1982
Trt	Yield lb/A	Price $/lb	Value $/A	Value $/A	Value $/A
1 (cut)	2403	1.87	4506	4901	5809
2 (1/4 pr)	2465	1.86	4586	5146	6063
3 (2/4 pr)	2600	1.79	4651	4998	5855
4 (3/4 pr)	2989	1.81	5424	5114	5724
5 (4/4 pr)	2844	1.82	5170	–	5053
6 (1/4 pr.E)	2413	1.87	4510	5138	6037
7 (2/4 pr.E)	3033	1.86	5650	5401	5712
8 (1/4 pr.L)	2978	1.84	5467	4784	5316
9 (2/4 pr.L)	2459	1.79	4420	5188	5835
10 (cut L)	2828	1.87	5298	–	5432
LSD's					
Trt .05	544	.03	ns		
.01	ns	.05	ns		
Reps .05	ns	ns	ns		

E = Harvested 1 week pre optimum
L = Harvested 1 week post optimum

2000269672

Source: https://www.industrydocuments.ucsf.edu/docs/qsyk0000

Burley Plant Air flow through burley stalks with intact leaves was not affected by direction of flow, that is, from the bottom of the plant toward the top (upright) or vice-versa, Fig. 5. Slopes of the lines, 0.69 to 0.72 (Table 2) were not affected by density of the bulk but the intercepts varied with density reflecting the decrease in flow which occurred with increases in density. Flow through the intact burley plants, for a given bulk density was greater than for similar density randomly loaded primed leaves. This is probably due to the relatively high density of the stalk material which does not occupy its pro-rata share of the space resulting in more pore space in the burley than in a comparable density of leaves without stalks.

Table 2. Effects of Density of Compaction on Regression Coefficients for Air Flow Equation log V = log b + m log P where V is the Superficial Velocity and P is the Input Pressure Gradient.

	Density kg/m^3	Slope m	Unity Intercept b	r^2
Random Leaves	183	666	.00458	978
	240	766	.00202	977
	300	884	.00059	937
Burley Stalks Upright	210	709	.01633	997
	287	703	.00867	999
	360	722	.00451	994
Burley Stalks Inverted	210	688	.01571	986
	287	700	.00892	999
	360	723	.00418	999
Aligned Stem System	163	708	.00904	.993
	218	664	.00544	.925
	287	807	.00136	.921
Stems Down	180	613	.01116	.857
	240	670	.00660	.946
	336	769	.00145	.993

Aligned
midribs ali
densities fr
0.66 to 0.81
0.61 to 77 f
appreciable i
again evident
flow.

Random Ve
random leaves
pressure is gr
due to better
material and t
passages are b

Density Eff
similar to the
effects would b
the pressure gr
a given observat
group of observa
together. The de
brought much clo
well compensated

2000269673

Source: https://www.industrydocuments.ucsf.edu/docs/qsyk0000

Aligned Leaves Tobacco leaves were placed, with the butt ends of the midribs aligned, into two sections of a flow measuring apparatus at densities from 163 to 336 kg/m^3. Slopes of the response lines varied from 0.66 to 0.81 for tip to butt flow depending on loading density and from 0.61 to 77 for butt to tip flow, Table 2. These differences do not appear appreciable in graphs of the response, Fig. 6 but the density effect is again evident. The response was not strongly dependent on direction of flow.

Random Versus Aligned Leaves Comparison of results for aligned versus random leaves for similar densities, Fig. 7, shows that the flow at a given pressure is greater for aligned than for random leaves. This is felt to be due to better orientation of the passage between the leaves for the aligned material and the probability that in the random material many of the passages are blocked by midribs lying at right angles to the passages.

Density Effects A procedure for normalizing the effects of density similar to the division of static pressure by bed depth to normalize depth effects would be useful. By trial and error it was found that division of the pressure gradient by the ratio $(d_i/d_{ave})^3$, where d_i is the density of a given observation and d_{ave} is average or intermediate density of that group of observations, brought the different densities reasonably close together. The density lines for the whole plant burley data, Fig. 8, were brought much closer together but it is clear that the lower density was well compensated but the higher density was undercompensated. For the

2000269674

Source: https://www.industrydocuments.ucsf.edu/docs/gsyk0000

aligned leaf data, the lower density was almost completely compensated but the higher density was less well corrected. For random leaves, the lower density was slightly overcompensated and the higher density slightly under-compensated. Additional work will be required to develop a technique to more accurately explain the manner in which crop density affects air flow.

IV. Publications:

Maw, B.W. and C.W. Suggs. 1984. Sorting and selection of bare root transplants. Trans. of ASAE 27(3):706-710, 714.

Maw, B.W. and C.W. Suggs. 1984. A seedling taping machine for bare root plants. Trans. of ASAE 27(3):711-714.

Suggs, C.W. 1984. Mechanical harvesting of flue-cured tobacco. Part 14. Properties of green and dry stalks. Tob. Sci. 28:85-90.

Suggs, C.W. 1984. Wood chip stoker and furnace for curing tobacco. Trans. of ASAE 27(5):1542-1545.

V. Manuscripts Accepted for Publication:

Suggs, C.W. and Alicia Lanier. 1985. Air flow through woodchips and sawdust. In Press. Trans. of ASAE.

Suggs, C.W. Mechanical harvesting of flue-cured tobacco. Part 15. Design and evaluation of a low clearance tractor-mounted "last-over" harvester. In Press. Tob. Sci.

VII. Papers Presented at Professional Meetings:

Suggs, C.W. 1985. Improvements of wood chip stoker and furnace. 31st Tob. Workers Conf.

Suggs, C.W. 1985. Burley mechanization research in North Carolina. 31st Tob. Workers Conf.

Figure 1. Mach
and
a ch

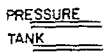

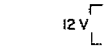

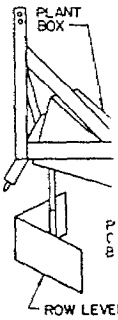

Figure 2. Sel
str

2000269675

Source: https://www.industrydocuments.ucsf.edu/docs/qsyk0000

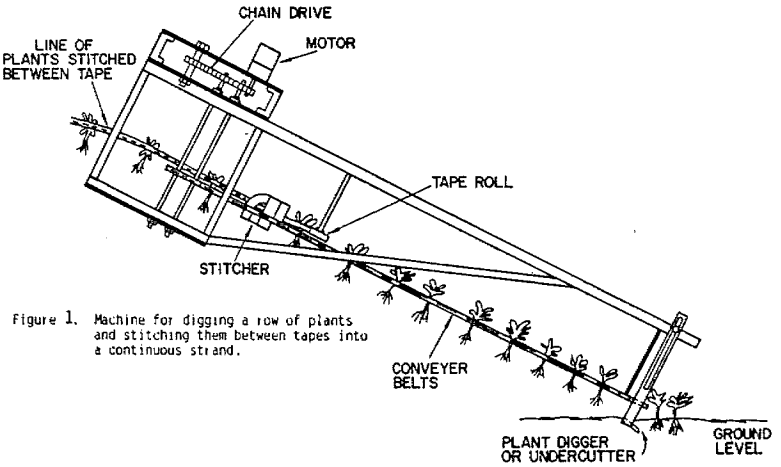

Figure 1. Machine for digging a row of plants and stitching them between tapes into a continuous strand.

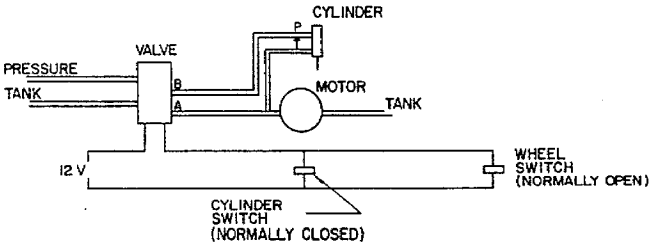

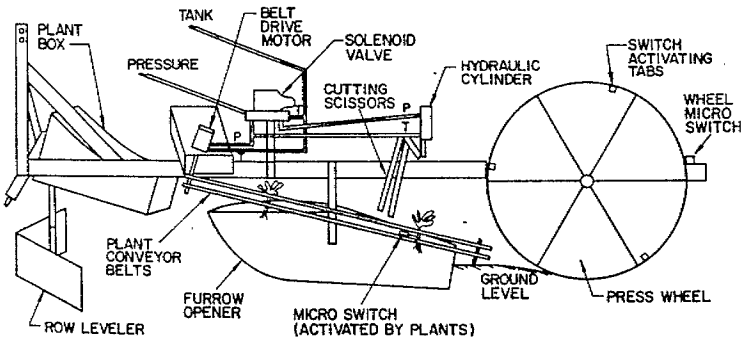

Figure 2. Self feeding transplanter. Stitched plants passing between belts are separated from strand and planted.

2002069676

Source: https://www.industrydocuments.ucsf.edu/docs/qsyk0000

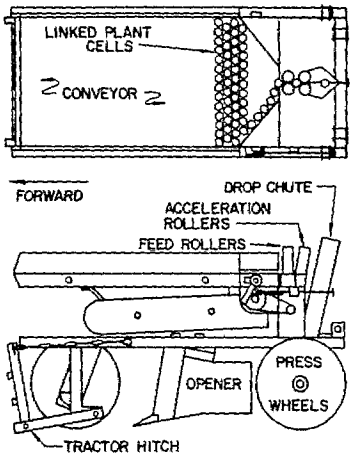

Figure 3. Self feeding transplanter which uses plants grown in a honeycomb of cells which unfolds into a strand or belt of cell carrying plants.

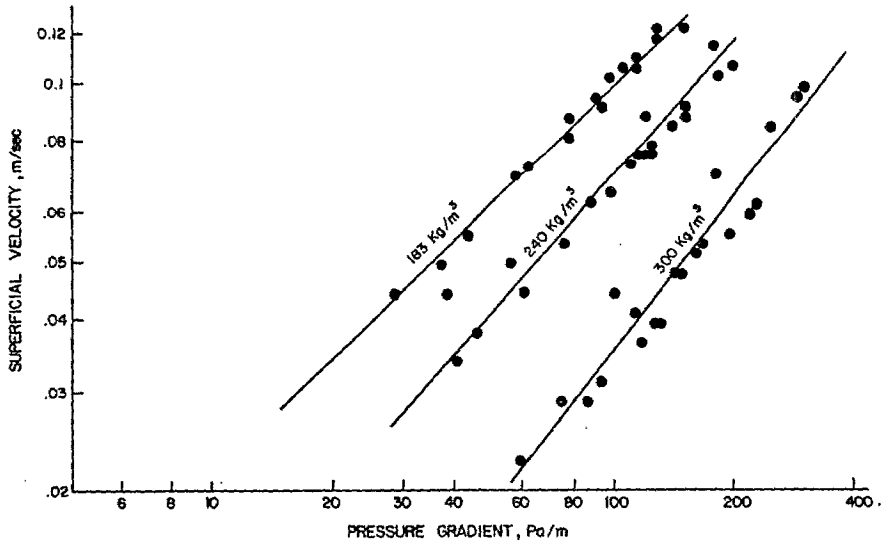

Fig. 4. Flow versus pressure gradient relationship for three densities of tobacco leaves.

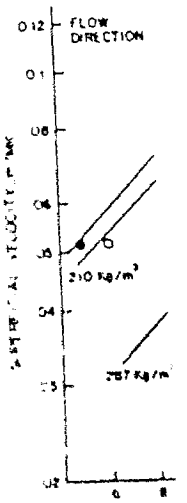

2000269677

Source: https://www.industrydocuments.ucsf.edu/docs/qsyk0000

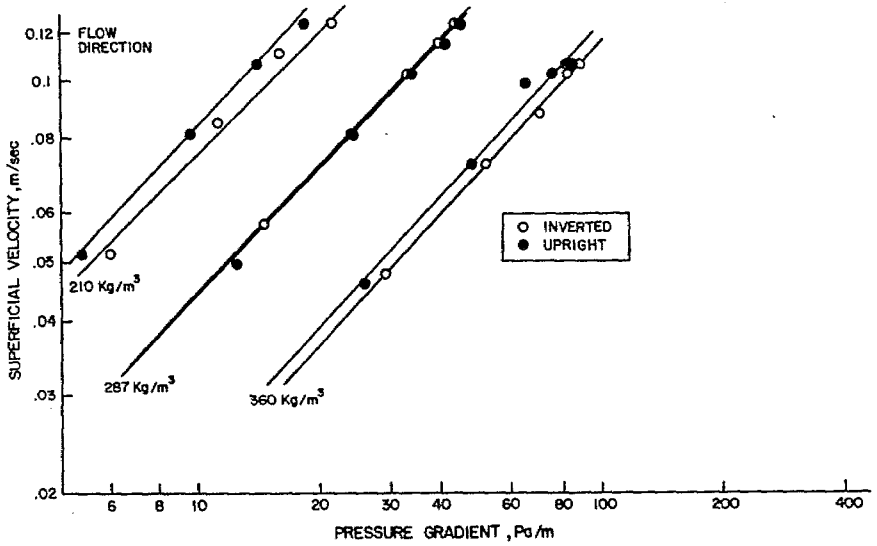

Fig. 5. Flow versus pressure gradient for bulked burley tobacco plants with air passing from bottom to top of plants (upright) or vice versa.

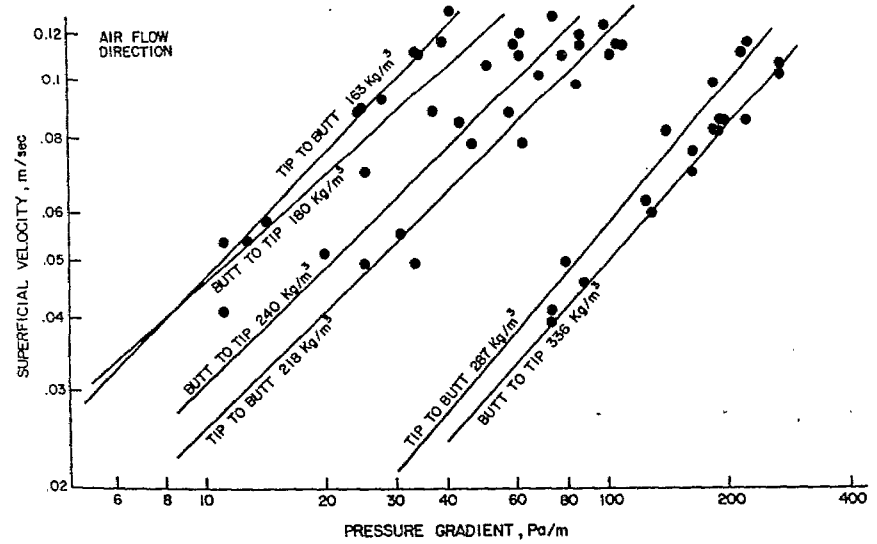

Fig. 6. Flow versus pressure gradient of aligned leaves subjected to two directions of air flow.

2000269678

Source: https://www.industrydocuments.ucsf.edu/docs/qsyk0000

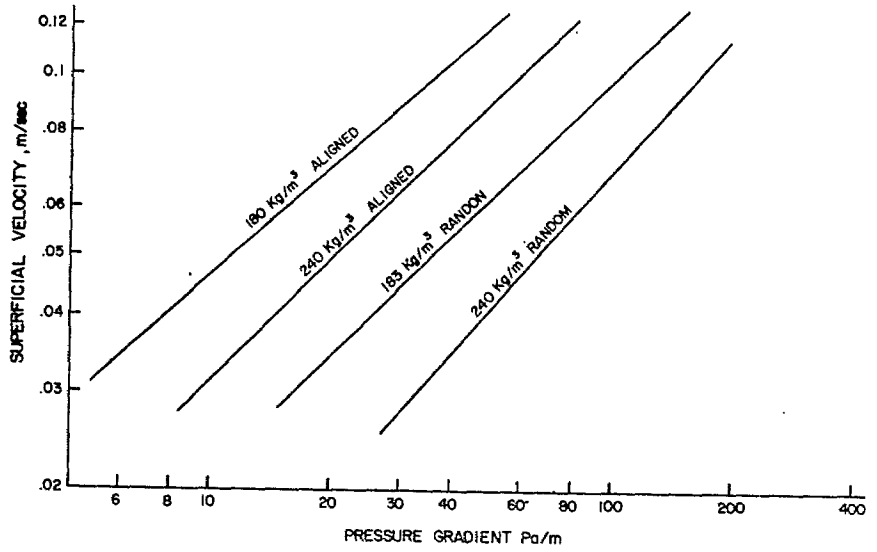

Fig. 7. Comparison showing the increase in air flow for aligned leaves.

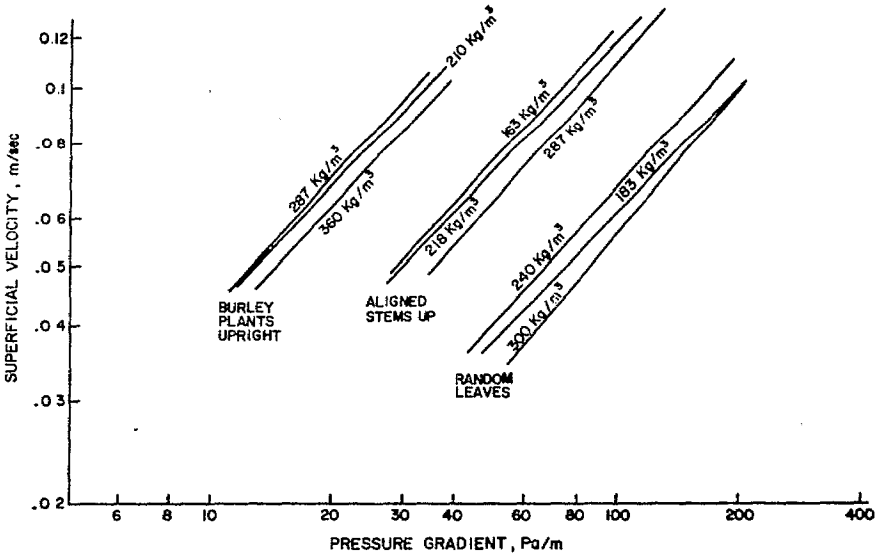

Fig. 8. Partial normalization of the density effect by dividing the pressure gradient by the third power of the ratio of the density of a sample to a reference density.

2000269679

Source: https://www.industrydocuments.ucsf.edu/docs/qsyk0000

Title: NC 02136: Optimization of Tobacco Curing Systems

Project Leaders: C.W. Suggs and R.W. Watkins

I. Summary of Research:

A. Effects of Barn Humidity on Fuel Consumption and Leaf Quality

Curing tests evaluating the effect of high and low humidity on quality and fuel consumption substantiated Extension's recommended curing humidities. Lower humidity was marginally better on quality but increased fuel use drastically. Higher humidity used less fuel but was seriously detrimental to quality.

B. Curing Characteristics of Aligned Racks, Random Racks and Random Boxes

Some growers have experienced difficulty and longer curing time as well as increased fuel consumption when curing tobacco in boxes. An experiment designed to compare rack curing with box curing was designed and run at the Oxford Research Station during the Summer of 1984. The evaluations were made in 3 curing chambers, utilized six primings, (lugs through tips) with equal loads of fresh tobacco in each barn at each priming. Barn loads were 480 lb (light), 600 lb (medium) and 720 lb (heavy). Cured weight from the barns varied, according to load and priming from about 60 lb to 125 lb.

Results from one years data (6 cures x 3 barns) suggest that the cured weight and the crop price is not appreciably different for racks and boxes, Table 1. Curing time was less for racks but fuel consumption appears to have been less for the boxes. Resistance to air flow was greater for boxes, hence the volume of air passing through the boxes was less than for racks. The work will be continued to better evaluate these characteristics.

2000269680

Source: https://www.industrydocumentslibrary.ucsf.edu/docs/qsyk0000

Table 1. Curing time and energy and price of racks and boxes.

	Green wt lb	Cured wt lb	Price $/lb	Btu/lb	Curing time hr
Aligned Rack	560*	91.4	1.80	15850	106
Random Rack	560	98.1	1.76	13749	129
Box	560	96.3	1.76	13631	132

*Some of this material may have contained excess surface moisture resulting in a low cured weight.

C. Bulk Curing of Primed Burley

Bulk curing trials were carried out with tobacco from the Waynesville Station in the curing chambers at the Oxford Station. These trials compared bulk cured whole stalks, primed lower half stalk and primed lower half stalk with similar air cured materials. Results showed that it was essential to retard drying so that the leaf could proceed past the yellow and brown properly before dessication stopped the process. Where drying was properly controlled the bulk cured leaf was of similar quality to the air cured leaf. Six curing cabinets are being constructed to continue this work on the Waynesville Station.

IV. Publications:

Watkins, R.W. Mech. A.G. 187 Mechanization (in 1985 Tobacco Information) Pages 102-111, N.C. Agri. Expt. Sta.

VI. Manuscripts in Review:

Suggs, C.W. and A.L. Zimmer. Air flow through fresh tobacco leaves.

VII. Papers Presented at Professional Meetings:

Suggs, C.W. 1985. Comparison of curing characteristics of boxes and racks. 31st Tob. Workers Conf.

2000269681

Source: https://www.industrydocuments.ucsf.edu/docs/qsyk0000

Suggs, C.W. 1985. Effects of leaf depth and density on curing of tobacco in boxes. 31st Tob. Workers Conf.

Suggs, C.W. and A.L. Zimmer. 1984. Air flow through tobacco leaves during curing. Winter Meeting of ASAE, Paper #84-3560.

2000269682

Source: https://www.industrydocuments.ucsf.edu/docs/qsyk0000

NCO 2124: INSTRUMENTATION AND PROCEDURE TO MEASURE QUALITY AND COMPOSITION OF AGRICULTURAL PRODUCTS

PROJECT LEADER: W.F. McClure

I. Summary of Research: A status and future prospects of near infrared technology in tobacco:

Tobacco is a rather unusual product. It is produced from a plant which can be manipulated, genetically and during processing to yield particular quality characteristics which appeal to the consumer. These desirable attributes are quite often related to the chemical composition of the product.

Many different types of tobacco go into tobacco products, including Virginia (or flue-cured), Burley, Maryland, and Turkish. Each year tobacco workers make literally thousands of chemical analyses to support their work. The genetecists perform chemical analyses to determine the performance of new germ plasm. The agronomist needs chemical analyses of his material to ascertain in influence of new cultural practices. The agricultural engineer is aware that different curing regimes can affect chemical composition. The manufacturer needs feedback from chemical analyses of raw material in order to control his blending operations.

Near infrared analysis of the chemical composition of tobacco was first introduced at North Carolina State University in 1968(2). Incorporation of this technology into the various phases of tobacco production and processing was slow at first. However, today almost every segment of the USA industry is making use of near infrared instrumentation. This paper is written to discuss the developments of NIR in the tobacco industry in the USA.

INSTRUMENTATION

Qualitative interpretation of the information in NIR spectra of tobacco (2) led to the design and development of the COMP/SPEC, a custom-built Computerized Spectrophotometer (4). A block diagram of this system is given in Figure 1. The system operates in the single beam mode using a Cary 17 monochromator which has a wavelength range of 0.185 to 3.2 micrometers (m). The grating monochromator is blazed at 1.6 m. The use of thermoelectrically cooled lead sulfide cells restricts the useful range from 0.9 to 2.6 m. Operating in the single beam mode, the system stores the instrument response to a Halon standard for spectral correction of the sample curve during scanning.

Each recorded spectrum is made up of 1700 data points, each data point being the average of 1126 analog-to-digital conversions. Data are taken every nanometer (nm) over the scanning range from 0.9 to 2.6 m. The spectra are permanently stored on diskettes (87/side) and set aside until they are transferred to hard disk for further analyses.

Two additional Nova computers have now been added allowing the three functions of data acquisition, data analyses, and program development to be performed simultaneously. An Eclipse S/130 with an array processor has been added to

2000269683

Source: https://www.industrydocuments.ucsf.edu/docs/qsyk0000

conduct Fourier research (see the paper on Fourier Analysis of Near Infrared Spectra).

ANALYSES OF TOBACCO CHEMISTRY

Sugars. The first component in tobacco to be analyzed with NIR instrumentation was sugars (3). Reflectance spectra were acquired from samples in an open cup (without the quartz plate). An eight term log(1/R) calibration was obtained by a stepwise regression procedure which selected 2.100, 1.898, 2.216, 1.742, 1.788, 2.300, 1.722, and 1.600 m as measurement wavelengths. The standard error of prediction (SEP) was 1.41% for a range of sugars from 0 to 29%. The residual standard deviation of the NIR method was 10.09% compared to the laboratory standard method (16.31%).

The results were surprisingly good in view of the fact that the samples were packed in an open cup with little control over density. Of the 152 samples in the experiment 129 were Virginia type, 16 Burley, and 7 Turkish. The sample mixture presented no problem for the NIR system in estimating the composition of the odd-numbered samples (the even-numbered samples were the training set).

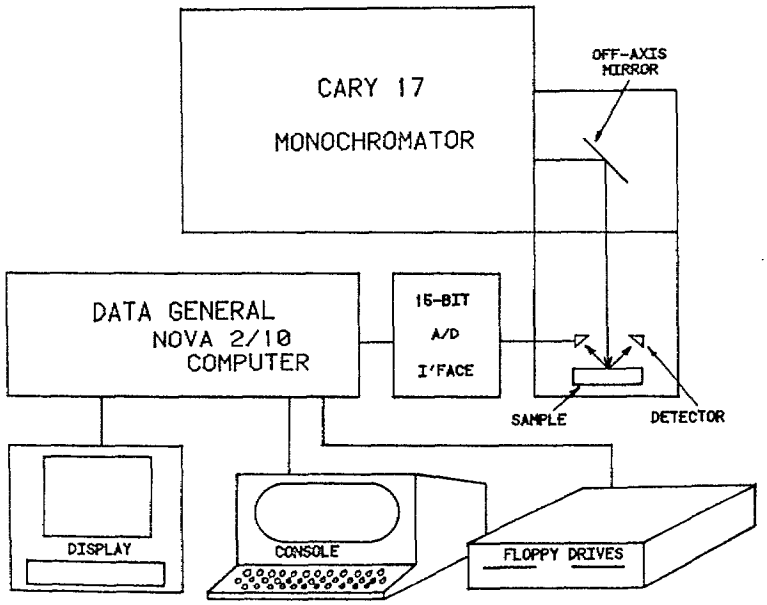

Figure 1. Block diagram of the COMP/SPEC.

2000269684

Source: https://www.industrydocuments.ucsf.edu/docs/qsyk0000

Alkaloids. Nicotine, comprising more than 98% of the total alkaloids in tobacco, is an important quality factor. As it has turned out, the nicotine calibration has been the most reliable. Wavelengths of 2.250, 2.130, 2.454, 2.575 and 2.144 m have proven to be reliable second derivative wavelengths for estimating nicotine. However, the first studies (1) indicated that 1.668, 1.203, 1.827 and 1.980 m were important wavelengths for second derivative calibrations. The latter wavelengths have become suspect since additional samples have been added to the training set.

Polyphenols. Two hundred thirty eight ground samples of tobacco were scanned (5) with the COMP/SPEC to study the relationship of NIR spectra to the polyphenol content of the samples. The second derivative equation

$$P = -2.731 + 275.88\ D^2_{2.220} + 237.95\ D^2_{2.440}$$

$$- 435.54\ D^2_{2.346} + 180.79 D^2_{2.210}$$

where P = % polyphenols

D^2_k = second derivative log(1/R) at wavelength k

is a valid calibration for predicting polyphenols in tobacco. If the equation is validated on similar samples within the same year, the SEP of the NIR method (0.747%) approached that of the wet chemistry method (0.70%). The largest SEP across three years of work was 1.35%.

POTENTIALS OF NIR

Minerals There is some indication that NIR can be used to estimate minerals in tobacco. This seems rather surprising since minerals do not have absorption bands in the NIR region. Table 1 shows the calibration statistics for 14 minerals in 25 freeze-dried leaf samples.

It should be remembered that calibration statistics alone are poor indications of how well a calibration will perform. However, it has been experienced in the NCSU lab that if the coefficient of variation is less than 10% it is likely that the calibration has validity (i.e. will hold up for predicting samples similar to the training set).

Copper, nitrogen, calcium, and potassium have the highest CV's of 1, 4, 4.2, and 6.6% respectively. Calibrations for nitrogen, calcium, and potassium in flue-cured tobacco have been validated and do appear to be strong calibrations (6). Thus it is anticipated that many other minerals may be estimated with NIR instrumentation.

Table
tobacco

MINERAL

1 BORON
2 CALCIUM
3 CHLORIN
4 COPPER
5 IRON
6 MAGNESI
7 MANGANE
8 NITRATE
9 NITROGE
10 PHOSPHOR
11 POTASSI
12 SODIUM
13 SULFUR
14 ZINC

Table

2000269685

Source: https://www.industrydocuments.ucsf.edu/docs/qsyk0000

otal alkaloids in
d out, the nicotine
250, 2.130, 2.454,
vative wavelengths
iicated that 1.668,
second derivative
t since additional

bacco were scanned
spectra to the
uation

.440

2.210

th k

. If the equation
of the NIR method
. The largest SEP

stimate minerals
ls do not have
ration statistics

poor indications
en experienced in
than 10% it is
p for predicting

V's of 1, 4, 4.2,
and potassium in
rong calibrations
e estimated with

Table 1. Calibration statistics for 14 minerals in freeze dried green tobacco (6 term $d^2(\log(1/R))/d^2$, n = 25)

	MINERAL	UNITS	R^2	SEC	CV	RANGE
1	BORON	ppm	.9365	1.292	9.0%	10-24
2	CALCIUM	%	.9865	0.122	4.2%	0.57-3.49
3	CHLORINE	%	.8901	0.071	10.7%	0.07-0.73
4	COPPER	ppm	.9153	1.369	1.0%	10-90
5	IRON	ppm	.9073	8.993	14.7%	13-74
6	MAGNESIUM	%	.9757	0.034	6.5%	0.31-0.83
7	MANGANESE	ppm	.9515	6.112	7.8%	16-94
8	NITRATES	%	.9088	0.028	9.3%	0.03-0.33
9	NITROGEN	%	.9849	0.149	4.1%	1.59-5.20
10	PHOSPHORUS	%	.9454	0.016	7.6%	0.23-0.44
11	POTASSIUM	%	.9578	0.157	6.6%	1.81-4.20
12	SODIUM	ppm	.9482	19.78	6.8%	96-387
13	SULFUR	%	.9515	0.014	6.7%	0-.21
14	ZINC	ppm	.9403	4.596	7.5%	13-74

Table 2. Wavelengths included in the $d^2(\log(1/R))/d^2$ calibrations for minerals in freeze dried tobacco.

CONSTITUTENT	WAVELENGTHS 1	2	3	4	5	6
1. BORON	1.760	1.998	2.572	2.316	0.928	1.948
2. CALCIUM[A]	2.018	1.756	1.898	1.412	1.600	2.150
3. CHLORINE	2.272	1.632	1.714	2.418	1.206	2.570
4. COPPER	0.936	2.464	1.228	0.926	2.226	2.294
5. IRON	0.940	1.970	2.444	2.364	1.222	0.998
6. MAGNESIUM	2.018	2.416	2.248	2.378	1.546	2.204
7. MANGANESE	1.970	2.464	1.290	1.610	1.772	1.082
8. NITRATES[A]	1.948	1.048	2.522	1.392	0.956	2.412
9. NITROGEN[A]	1.742	1.756	0.936	2.528	2.566	1.848
10. PHOSPHOROUS	1.738	2.554	2.456	1.958	1.020	2.038
11. POTASSIUM[A]	1.712	2.376	1.580	2.418	2.368	1.152
12. SODIUM	1.250	1.970	0.940	2.560	1.756	1.632
13. SULFUR	1.746	2.254	1.226	1.064	2.156	1.960
14. ZINC	0.936	1.904	0.976	2.364	2.532	1.812

[A] n = 100 for these constituents

2000269686

Source: https://www.industrydocuments.ucsf.edu/docs/qsyk0000

Table 3. Calibration results for other constituents in tobacco for $d^2(\log(1/R))/d^2$ data type (n = 59).

CONSTITUENT	UNITS	R^2	SEC	CV_c	RANGE
Tar/Cigarette	mg/cig	0.937	1.118	4.43%	17-36
Tar/gm	mg/gm	0.875	1.116	3.69	24-36
X-Amino Nitrogen	%	0.947	0.096	30.28	0.2-0.6
Starch[A]	%	0.930	0.066	8.81	0.5-1.4
Wax	%	0.784	0.083	11.13	0.4-1.3
Pet Ether Ex	%	0.764	0.249	3.32	6-10
Holucellulose	%	0.933	0.600	1.63	31-43
Chlorides	%	0.939	0.025	13.37	0-0.4
Ash	%	0.978	3.400	23.60	11-18

[A] Validated Equation (n = 63)

Other Components. Calibrations exist for other constituents (see Table 3). However, these equations, except for starch, have not been validated. The equation for each has been tested and the results have been very poor.

The equations for tar were developed by taking the spectra of samples before they were smoked. It is not unreasonable to expect a correlation with tars. Since it is likely that tars are related to chemical composition, and if NIR spectra are related to chemical composition, then it seems that NIR spectra would be related to tars.

LATEST RESULTS

Two hundred samples of tobacco were analyzed in triplicates for sugars, nicotine, nitrogen, water soluble nitrogen, calcium and potassium. The sample set was scanned on the COMP/SPEC and split into two files, one containing the odd numbered samples and the other the even. Calibrations were computed on the odd sample set and tested on the even set.

Statistics for calibration and prediction are given in Table 4 for four calibration models: (a) $\log(1/R)$, (b) dR/Rd, (c) $d^2(\log(1/R))/d^2$, and (d) the Fourier model using the best 11 coefficients from the first 99. While some of the models appear to give better SEP's than others it seems apparent that all the models perform satisfactorily.

2000269687

Source: https://www.industrydocuments.ucsf.edu/docs/qsyk0000

Table 4. Latest results on NIR analysis of tobacco.

CONSTITUENT	CALIBRATION MODEL	NO. TERMS	r^2	SEC	SEP
SUGARS	LR[a]	7	0.968	0.690	0.998
	DR[b]	7	0.972	0.644	0.994
	D2[c]	7	0.964	0.734	1.047
	FO[d]	11	0.975	0.623	0.936
NICOTINE	LR	7	0.952	0.145	0.178
	DR	7	0.955	0.141	0.191
	D2	7	0.141	0.955	0.220
	FO	11	0.961	0.132	0.236
NITROGEN	LR	7	0.792	0.126	0.142
	DR	7	0.904	0.086	0.127
	D2	7	0.899	0.088	0.144
	FO	11	0.916	0.085	0.132
WSN	LR	7	0.716	0.113	0.143
	DR	7	0.776	0.101	0.145
	D2	7	0.815	0.092	0.153
	FO	11	0.820	0.092	0.154
CALCIUM	LR	7	0.923	0.165	0.195
	DR	7	0.947	0.138	0.188
	D2	7	0.943	0.142	0.203
	FO	11	0.956	0.128	0.191
POTASSIUM	LR	7	0.834	0.162	0.169
	DR	7	0.880	0.138	0.199
	D2	7	0.891	0.131	0.131
	FO	11	0.896	0.131	0.228

FUTURE OF NIR IN TOBACCO

Almost all segments of the tobacco industry are using NIR. Most major manufacturers are now using NIR to test incoming product and several are now doing research to integrate it into the processing plants. NIR will become a part of plant production. In the state of Georgia county agents have used NIR to analyze plant canopy of corn and other crops. The results of these NIR analyses are used to determine the need for fertilizer. Already there are cases where farmers have saved hundreds of dollars by relying on the NIR measurements. Tobacco farmers will learn to benefit from this new technology.

NIR has tremendous potential for supporting plant breeding research. Much more germ plasm can be examined and the feedback of the information is very timely. Experience in this lab indicates that calibrations are useful for selections across years without any adjustments for bias (or offset). It appears that only relative determinations of composition are necessary.

2000269688

Source: https://www.industrydocuments.ucsf.edu/docs/qsyk0000

Diverse applications are expected to emerge from within the research labs of major manufacturers as they get more experience with the technology. NIR appears to be a natural for controlling blending lines, testing for additives, etc.

NIR techniques will become an indispensable part of grading and marketing schemes in the future. Current subjective methods of assessing quality is a waning art. In years to come slow imprecise techniques of evaluating quality and composition will be replaced by the speed and precision of NIR techniques.

Finally, Fourier NIR technology will play a greater role in the future. Savings in data acquisition time and data storage requirements make this method too valuable to be ignored. FTNIR instrumentation (interferometers) will become commonplace first in the research lab and then in commercial applications.

REFERENCES

1. Hamid, A., McClure, W.F. and Weeks, W.W. 1978. Beitr. Tabakforsch 9(5):267-274.

2. McClure, W.F. 1968. Tobacco Science 12:232-235.

3. McClure, W.F., Norris, K.H. and Weeks, W.W. 1977. Beitr. Tabakforsch. 9(1):13-17.

4. McClure, W.F. and Hamid, A. 1980. American Laboratory 12(9):57-69.

5. McClure, W.F. and Williamson, R.E. 1982. Beitr. Tabakforsch. 11(4):219-227.

6. McClure, W.F., Hamid, A., Giesbrecht, F.G. and Weeks, W.W. 1984. Appl. Spectrosc. 38(3):322-328.

II. Graduate Students:

1. Larry M. Firestone: Computer Vision System for Evaluating Quality Factors.
2. Roger M. Hoy: Robotic Grippers with Tactile Feedback.

III. Publications:

1. McClure, W.F., F.G. Giesbrecht and W.W. Weeks. 1984. Fourier analysis enhances NIR diffuse reflectance spectroscopy. Appl. Spectrosc. 38(3):322-328.
2. Eisen, E.J., T.R. Bandy, W.F. McClure and E. Horstgen-Schwark. 1984. Estimating body composition in mice by near-infrared spectroscopy. J. Animal Sci. 58(5):1181-1190.
3. McClure, W.F., W.E. Ballinger and E.P. Maness. 1984. Computerized spectrophotometric analyses of blueberries. Am. Laboratory 16(10): 97-112.

2000269689

Source: https://www.industrydocuments.ucsf.edu/docs/qsyk0000

4. McClure, W.F. 1984. History and future prospects of near infrared analysis. Analytical proceedings 21(12):485-486 (England).
5. McClure, W.F. 1984. Robotics in Japan: A challenge for the American agricultural engineer. Proceedings of the First International Conference on Robotics and Intelligent Machines in Agriculture. Am. Soc. of Agric. Engineers, St. Joseph, Michigan.

IV. Manuscripts Accepted for Publication:

1. McClure, W.F. 1984. Fourier analysis of near infrared spectra. Proceedings of the 34th Australian Cereal Chemistry Conference, Melbourne, Victoria (October, 1984).
2. McClure, W.F. 1984. Status of near infrared technology in the tobacco industry. Proceedings of the 34th Australian Cereal Chemistry Conference, Melbourne, Australia (October, 1984).

V. Papers Presented at Professional Meetings:

1. McClure, W.F. 1984. Fourier analyses of near-infrared spectra of agricultural products. Fourth International Symposium on Near Infrared Reflectance Analysis (July).
2. McClure, W.F. 1984. The power of Fourier analysis in applied spectroscopy. 2nd Diffuse Reflectance Conference. Wilson College, Chambersburg, PA (August).
3. McClure, W.F. 1984. Fourier analysis of NIR spectra. Federation of Analytical Chemists and Applied Spectroscopists. Pittsburg, PA (September).
4. McClure, W.F. 1984. Applied NIR spectroscopy. 34th Australian Cereal Chemists' Conference, Melbourne, Australia (October).
5. McClure, W.F. Status of NIR research in the tobacco industry. 34th Australian Cereal Chemists' Conference, Melbourne, Australia (October).
6. McClure, W.F. 1984. Optical sorting of small fruits for quality and composition. CSIRO Division of Food Research, Sydney, Australia (October).
7. McClure, W.F. 1984. Using NIR Sepctroscopy. N.B. Love Industries, Sydney, Australia (October).
8. McClure, W.F. 1984. Application of NIR in tobacco processing. W.D. and H.O. Wills LTD, Sydney, Australia (October).
9. McClure, W.F. 1984. Calibration techniques in NIR Research. Agritech Services LTD, Toowoomba, Australia (October).
10. McClure, W.F. 1984. New Developments in NIR Research. Technicon LTD, Sydney, Australia (October).
11. McClure, W.F. 1984. Fourier Analysis of Near Infrared Spectra. The ASAE. New Orleans, LA (December).
12. McClure, W.F. 1984. Near Infrared Analyses of the Composition of Tobacco. NCSU Tobacco Staff Meeting (November).

VI. Graduate Student Theses Completed During Reporting Period:

Firestone, L.M. 1984. AGVISION: Agricultural Commodity Detection System Using Processing and Pattern Recognition Techniques. Masters Thesis, N.C. State University.

2000269690

Source: https://www.industrydocuments.ucsf.edu/docs/qsyk0000

VII. Visiting Professionals:

1. Mr. Sun Ting Cong, Visiting Scholar. Jilin University Chungchun, Peoples Republic of China (8 months): Design and development of intelligent machines.
2. Dr. Marvin R. Paulsen, Visiting Associate Professor. Department of Agricultural Engineering, University of Illinois, Urbana-Champaign (6 months): Computer Vision and Near Infrared Analysis.

VIII. Acknowledgements:

Research conducted during this period was supported, in part, by the N.C. Tobacco Foundation, Inc.

Appreciation is expressed for the continued support and encouragement of Dr. R.E. Williamson, USDA/ARS; Dr. W.W. Weeks, Crop Science Dept., and Dr. F.G. Giesbrecht, Statistics.

Special appreciation is given to Mike McLester for his technical support and encouragement over the years.

Title:

Projec

I. Su

Th

A.

B.

Du
line of
been co
changes
were gro
and expo
phase un
were inv
equipped
pad inte
the cell
decrease
the cour
in the n
of cells
rate of
for suffi
reflected
of organe

II. Grad

Male
comp

IV. Publi

Thom

2000269691

Source: https://www.industrydocuments.ucsf.edu/docs/qsyk0000

Title: NC 03919 Characterization of Meristem Morphogenesis in Response to Changes in Environment and Age

Project Leader: Judith F. Thomas

I. Summary of Research:

This project contains the following objectives for research with tobacco:

A. To describe the anatomical and quantitative cytohistological features of the apical meristem of tobacco plants as growth progresses from the vegetative to reproductive stage of development under various photoperiod and temperature regimes.

B. To compare meristematic development in the day neutral variety of flue-cured tobacco, NC2326, with that of its short-day isogenic counterpart, NCTG-22.

During 1984 shoot apices of the short-day sensitive Mammoth isogenic line of Nicotiana tabacum L. NC2326, NCTG-22 (from E. A. Wernsman) have been collected for examination by electron microscopy for ultrastructural changes during the transition from vegetative to reproductive growth. Plants were grown in the controlled environment facilities of the NCSU Phytotron and exposed to an inductive short day photoperiod after a 6-week juvenile phase under non-inductive long day conditions. Ultrastructural changes were investigated from photomicrographs using an Apple IIe microcomputer equipped with a VideoPlus image measurement software package and a Koala pad interfaced directly to a video camera and monitor. Under short days the cells (excluding cell walls), nuclei, vacuoles, and proplastids decreased in size, while size of mitochondria remained unchanged during the course of the induction period (17 days). In contrast, these features in the non-induced control plants did not change. The reduction in size of cells and most of the organelles is associated with an increase in the rate of leaf initiation and in the size of the apical dome. The demand for sufficient energy input to maintain this higher level of activity is reflected by the 40-70% volume increase in the mitochondrial population of organelles in the cells of the induced apices.

II. Graduate Student:

Malee Kanchanapoom, Ph.D. candidate, Department of Botany; expected completion date: May, 1986.

IV. Publications:

Thomas, Judith F. and Malee Kanchanapoom. 1984. Characterization of the meristematic transition upon induction in Nicotiana tabacum L. Plant Physiol. 75: 136.

2000269692

Source: https://www.industrydocuments.ucsf.edu/docs/qsyk0000

Title: NC Ø3435 Limited Growth of Metabolic Sinks to Enhance Quality of Flue-cured Tobacco

Project Leader: H. Seltmann (USDA, ARS)

I. Summary of Research:

A. Regional tobacco growth regulator test.

B. Directed vs over-the-top spray application of sucker-controlling agents.

C. Effect of the illegal use of 2,4-D and dicamba when used to yellow tobacco.

D. Quality as affected by sucker growth and leaf harvest.

E. Mode of action of fatty alcohols in controlling suckers.

F. Effect of Prime+ on the small grain cover crop.

A. Regional tobacco growth regulator test.--The Regional Committee elected to gain more information on BCC-3 (alcohols), Prime+ and fatty alcohols as a tank-mix, and Bud Nip (BN) in a split application using 2Ø or 3Ø ml of spray solution per application per plant. Results indicated that sucker control was similar when BCC-3 as a dual application was compared to Off-Shoot T (FA), when Prime+ in a sequential application with FA was compared to a tank-mix of Prime+ and FA, and when Bud Nip in a split application using 2Ø ml/plant was compared to 3Ø ml/plant per application (Table 1). There were no outstanding values among the chemical treatments evaluated for chemical and physical properties. Values for total alkaloids, total ash, filling value, and equilibrium moisture content obtained from the hand-suckered treatment were different from those obtained with the chemical treatments (Table 2).

B. Directed vs over-the-top spray application of sucker-controlling agents.--Knowing that the directed (X) spray technique will reduce the residues of any chemical sprayed in this manner because less leaf surface is wetted, we continued a comparison with over-the-top (Ø) application using commercial agents to determine whether sucker control can be improved (Table 3). There was a tendency for better sucker control with over-the-top applications in Treatments #4 and #5 when the major emphasis for control came from KMH. This can be attributed to the fact that absorption of KMH, a systemic, would be correlated with the amount of leaf surface wetted. The Ethrel/KMH sequential application and the single KMH application were to not topped plants. These plants were topped later. As a consequence, percent total alkaloids was less than in the other treatments. The later topped plants also showed a decrease in yield.

C. Effect of the illegal use of 2,4-D and dicamba when used to yellow tobacco.--Applications of 2,4-D at 1Ø mg/plant and 2Ø mg/plant, as well as

2000269693

Source: https://www.industrydocuments.ucsf.edu/docs/qsyk0000

dicamba (Banvel D) at 15 mg/plant and 30 mg/plant, were used to yellow tobacco in the field in the same manner as one would use ethephon (Ethrel). Residues from green tissue samples (FW) for 2,4-D ranged from 1.0 ppm to 6.1 ppm and 1.5 ppm to 14.0 ppm, respectively, for the two rates applied; residues of dicamba ranged from 1.4 ppm to 7.5 ppm and 2.4 ppm to 15.1 ppm, respectively. The leaves after treatment showed epinasty and turned yellow, but at a slower rate than those treated with ethephon, which showed no epinasty. The stalks remaining in the field after harvest were readily identified as being treated with 2,4-D and dicamba because of tissue necrosis (browning), which did not occur with the ethephon. Stalk necrosis was greater with the dicamba.

There was a significant reduction in yield from the use of 2,4-D and dicamba. Although there was no significant difference in quality indexes among the treatments, tobacco company leaf experts tended to prefer those tobaccos that were not chemically yellowed (Tables 4 and 5).

D. Quality as affected by sucker growth and leaf harvest.—It has been often said that quality tobacco is made in the field, not in the curing barn (but quality can be ruined through curing). Leaf maturity and the onset of senescence are the processes frequently mentioned when quality is discussed. Under our present cultural practices the onset of senescence can be delayed because of over fertilization with nitrogen and the lack of metabolic sinks (like suckers) that are controlled to a high degree. Suckers, if present, would put a drain on physiological processes in the plant and enhance senescence. In this study we tried to separate the effect of metabolic sinks and the effect of a delay in harvest (increased maturity) on the cured leaf.

Plants treated with MH, Bud Nip (BN), and Prime+ were manipulated three different ways: (1) if suckers were not totally controlled, they were allowed to grow and the leaves were harvested on a normal schedule; (2) if suckers were not controlled, they were destroyed with a drop of FA and the leaves were harvested on a normal schedule; (3) if suckers were not controlled, they were destroyed and the leaves were harvested one week later than the normal schedule. The BN and Prime+ treatments were either applied over-the-top (OTT) or down-the-stalk (DS) with a Hudson Hydragun. Both normally hand-suckered and closely hand-suckered plants were harveted either normally or on the delay schedule.

The results given in Table 6 show that the delay in harvest (1 vs 2; 3 vs 4; 6 vs 7; 9 vs 10; 12 vs 13; 15 vs 16; 18 vs 19; 21 vs 22) generally resulted in a decrease in yield. In general, the same comparisons showed an increase in $/cwt, an increase in the quality index, an increase in total alkaloids, and possibly a decrease in reducing sugars.

A comparison of those treatments harvested normally whether some sucker growth was present or not, showed little effect of the sucker growth on the various parameters determined. Apparently the suckers present did not afford a large enough metabolic sink to have much effect on yield and the process of senescence. In Table 7 the means of the chemical treatments were compared where (1) the suckers were not totally controlled, but harvest was normal; (2) where the suckers were totally controlled, and harvest was normal; (3) where suckers were totally controlled and harvest was delayed one week. The delay in harvest reduced yield, but increased $/cwt and the quality index. Total alkaloids were increased and reducing sugars were decreased. The presence or

2000269694

Source: https://www.industrydocuments.ucsf.edu/docs/gsyk0000

absence of suckers (comparing #1 with #2) showed no difference. If a large metabolic sink is not present to enhance senescence, then a delay in harvest can have a decided effect on the quality of the cured leaf.

E. Mode of action of fatty alcohol, contact-type, sucker controlling agents.--Tobacco tissue destruction from the fatty alcohol containing suckering agents is positively correlated with concentration and temperature. Cuticle disks removed from the upper surface of tobacco leaves were not destroyed with any concentration of the fatty alcohols, but penetration by the fatty alcohols through the cuticle did occur. Using cuticle-free tissue like Elodea leaves and beet root slices, it was found that the concentration of fatty alcohols used to control tobacco suckers is the concentration at which plant cell membranes are destroyed. The result is a mixing of cellular components as indicated by the browning of tissue and then dessication of the affected cells. The extent of the destruction and the speed with which it occurs may then be determined by the concentration of the fatty alcohols and the temperature, the latter determining how fast the fatty alcohols may volatilize and thus become ineffective.

F. Effect of Prime+, a suckercide, on the small grain cover crop.--We have demonstrated that Prime+, a dinitroaniline type chemical that has sucker controlling properties, when used at the labeled rate can affect the small grain cover crop, provided a herbicide was used to control weeds in the tobacco. Our studies have been with the herbicides Paarlan, Enide, and Devrinol. There was a significant effect on the number of small grain plants per square foot and in the fresh weight of the plants present. The effect may be greater on the below ground parts than on the aerial portions of the plants. A threshold amount of Prime+ will tend to stunt the lateral roots on the small grain without noticeably affecting the above-ground portions. An excessive amount will inhibit seed germination. It has been determined through bioassay using wheat and uncontaminated soil that 0.4 to 0.8 ppm of Prime+ in soil will inhibit growth. Apparently with a residual of one of the above mentioned herbicides, the addition of Prime+ will provide a threshold amount of inhibiting agents to affect the small grain cover crop.

II. Graduate Students:

Rawls, Eric K. M.S. Crop Science -
"The effect of Prime+ as a sucker control agent on flue-cured tobacco.

Wheeler, Jeffrey J. M.S. Botany -
"The mode of action of Off-Shoot T."

IV. Publications:

Seltmann, H., and B. C. Nichols. 1984. Agronomic, chemical, physical, and visual characteristics of hand-suckered vs maleic hydrazide treated flue-cured and burley tobacco. Agron. Jour. 76:375-378.

Priest, J. A., and H. Seltmann. 1983. Combination of growth inhibitors for tobacco sucker control: maleic hydrazide and chlorpropham. Tob. Sci. 27:156-157.

2000269695

Source: https://www.industrydocuments.ucsf.edu/docs/qsyk0000

VII. Papers Presented at Professional Meetings:

8th International Tobacco Scientific Congress, Vienna, Austria.
October 7-12, 1984.
"Effect of pesticides on oxygen uptake of tobacco leaves."
"Three new sucker-controlling agents."

31st Tobacco Workers' Conference, Pinehurst, NC. January 7-10, 1985.
"The response of bright tobacco to dicamba and 2,4-D when used as yellowing agents."

IX. Acknowledgements:

Joseph A. Priest for excellent technical assistance.

2000269696

Source: https://www.industrydocuments.ucsf.edu/docs/qsyk0000

Table 1. 1984 Advanced regional sucker control test

Treatments		Agronomic characteristics* Sucker control (%)	Yield (lb/a)	Price index ($/cwt)	Acre index ($/a)	Quality index**	Degree of injury
HS		53	2083	179	3733	60	-
FA/FA	4%/5%	48	2044	173	3556	52	Ø
BCC-3/BCC-3	4%/5%	49	2137	172	3704	50	Ø
FA/KMH	4%/170mg	80	2546	181	4621	59	Ø
FA/Prime+	4%/91mg	96	2620	179	4708	53	Ø
(Fa + Prime+)	(4% + 91mg)	95	2467	180	4436	53	***
FA/BN/BN	4%/85mg/85mg 30 ml	88	2603	180	4685	58	Ø
FA/BN/BN	4%/85mg/85mg 20 ml	88	2601	176	4594	53	Ø

* Mean of Kinston and Oxford. 4 reps per location.
** Quality index (Wernsman-Price) is a 1-99 rating based on government grade. High ratings are best.
*** Some phytotoxicity such as leaf cupping appeared on plants that were immature at treatment time.

Table 2. 1984 Advanced regional sucker control test: chemical and physical properties of cured tobacco.*

Treatments		Total Alkaloids (%)**	TVB minus nicotine	Reducing sugars (%)**	Total ash (%)**	Filling value (cc/g)	Equilib. moisture (SRH)
HS		2.90	.106	22.4	8.67	4.20	13.19
FA/KMH	4%/170mg	2.49	.106	23.6	7.77	4.00	13.37
FA/Prime+	4%/91mg	2.59	.103	22.0	7.74	3.74	13.21
(FA + Prime+)	(4% + 91mg)	2.55	.098	22.5	8.33	3.88	13.30
FA/BN/BN	4%/85mg/85mg 30 ml	2.64	.107	21.7	8.23	3.84	13.33

* Mean of Kinston and Oxford.
** Moisture free basis.

2000269697

Source: https://www.industrydocuments.ucsf.edu/docs/qsyk0000

ality dex**	Degree of injury
60	-
52	Ø
50	Ø
59	Ø
53	Ø
53	***
58	Ø
53	Ø

vernment grade.

hat were

nd physical

illing value (cc/g)	Equilib. moisture (SRH)
4.20	13.19
4.00	13.37
3.74	13.21
3.88	13.30
3.84	13.33

Table 3. Directed spray vs overall spray for sucker control 1/

Treatments		Percent control %		Yield lb/a		Quality index 2/		Sugar (%)		Total alkaloids (%)	
		X	Ø	X	Ø	X	Ø	X	Ø	X	Ø
1 FA/FA/KMH	4%/5%/170mg	98	99	2562	2566	54	54	22.1	21.2	1.65	1.65
2 FA/FA/Prime+	4%/5%/91mg	98	99	2575	2620	50	54	21.1	21.5	1.74	1.81
3 FA/FA/BN	4%/5%/170mg	99	99	2558	2612	55	53	23.4	21.8	1.61	1.68
4 Ethrel/KMH	75mg/170mg	88	93	2393	2285	53	54	23.6	23.2	1.46	1.50
5 KMH	170mg	90	92	2420	2507	55	53	21.9	21.7	1.55	1.56

1/ Mean of Clayton and Reidsville. 4 reps per location.

2/ Quality index (Wernsman-Price) is a 1-99 rating based on government grade. High ratings are best.

2000269698

Source: https://www.industrydocuments.ucsf.edu/docs/qsyk0000

Table 4. Effect of 2,4-D and dicamba on agronomic parameters and residue.

Treatment		Yield (lb/a)	$/cwt	Quantity index	$/a	FW Residue ppm
HS		2098 abc	177 a	58 a	3713 abc	-
FA/KMH		2460 a	180 a	58 a	4436 a	-
2,4-D	10 mg/p	1967 bc	173 a	57 a	3399 c	2.7
2,4-D	20 mg/p	2149 abc	176 a	55 a	3783 abc	6.6
dicamba	15 mg/p	1981 bc	173 a	55 a	3430 bc	3.3
dicamba	30 mg/p	1793 c	174 a	60 a	3117 c	8.4
ethephon	150 mg/p	2341 ab	178 a	56 a	4169 ab	-

1/ Means with the same letter are not significantly different at 10% level.

Table 5. Effect of 2,4-D and dicamba on chemical and physical properties and percent usuable.*

		Total alkaloids %	Reducing sugars %	RS/TA	Usable %	Fill capacity ml/gm	Moist equilib. %
HS		3.04	23.5	7.7	47	4.20	13.19
FA/KMH		2.61	24.8	9.5	53	4.00	13.37
2,4-D	10 mg/p	2.78	23.7	8.5	49	4.10	13.12
2,4-D	20 mg/p	2.53	24.0	9.5	27	4.10	13.10
dicamba	15 mg/p	2.62	25.7	9.8	34	4.24	13.03
dicamba	30 mg/p	2.24	27.1	12.1	30	4.16	13.15
ethephon	150 mg/p	2.61	24.4	9.3	27	4.39	12.77

*Means from combined reps (2) from Kinston and Oxford.

2006969699

Source: https://www.industrydocuments.ucsf.edu/docs/qsyk0000

Table 7. The effect of sucker control and leaf harvest on flue-cured tobacco.

Treatment	Yield lb/a	$/cwt	Quality index	Total alkaloids %	Reducing sugars %	RS/TA
1. Suckers not totally controlled;	2904	183	51	2.33	16.4	7.0
2. Suckers totally controlled; harvest normal	2913	184	54	2.34	16.4	7.0
3. Suckers totally controlled; harvest delayed 1 week	2744	188	61	2.46	15.2	6.2

Means of 6 chemical treatments x 4 replications

2000269701

Source: https://www.industrydocuments.ucsf.edu/docs/qsyk0000

03917 - INVESTIGATIONS IN TOBACCO TRANSPLANT PRODUCTION

R. C. Long

Remobilization of Nitrogen During Growth and Senescence (R. C. Long and (R. Goenaga)

Although the leaves on the upper-third of the flue-cured plant expand and mature under an apparent N stress after soil N has been virtually depleted, little is known regarding the source of N for those leaves. It has been assumed from limited indirect evidence that N was translocated from lower, senescing leaves to the upper, developing ones.

To test the hypothesis that the remobilization of N from the lower leaves is sufficient to sustain the growth of the upper leaves, a study with the following objectives was initiated in 1983 to determine:

a) the uptake of ^{15}N after topping,

b) the accumulation of N into different plant parts and leaf node positions after topping,

c) the remobilization of N from senescing leaves into younger leaves, and

d) the forms in which N is remobilized.

In 1983, a planting of McNair 944 was grown under standard cultural practices at the Central Crops Research Station. Just before topping, irrigation was applied to leach residual soil NO_3 below the root zone. An amount of $K^{15}NO_3$, equivalent to the residual NO_3 level, was applied to the soil. Plants were sampled at weekly intervals and divided into 11 plant parts. From eight sampling periods and five replications, a total of 440 samples were collected, dried, weighed, and ground. Analyses for total N and ^{15}N in the NO_3, insoluble N, and soluble N fractions were to be performed.

In 1984, the samples were spot-checked among sampling dates and plant parts to determine ^{15}N enrichment in each of the fractions. Enrichments were observed to be several-fold above background level. For that reason, the high cost of ^{15}N ($5,000) to repeat the study, and the time required to process and analyze additional samples, it was decided not to repeat the field application of ^{15}N in 1984, but instead to concentrate on completing the analyses on the samples already in hand.

2000269702

Source: https://www.industrydocuments.ucsf.edu/docs/qsyk0000

At this point, approximately 25-30% of the ^{15}N analyses have been completed. Large differences in enrichment have been observed suggesting different degrees of accumulation and mobilization of ^{15}N compounds. It will take approximately 18 months to complete the remaining analyses and to compile and summarize the data.

Rank Tobacco - Manipulating the Ripening Process (R. C. Long and E. Felipe)

A study begun in 1983 at the Central Crops Research Station and repeated in 1984 at that location and at the Border Belt Tobacco Research has the following objectives:

a) determine the effects of special management procedures on the rate of ripening and harvesting pattern of tobacco grown with excess N,

b) determine the effect of these practices on yield and quality,

c) apply this knowledge, if these procedures prove effective in modifying the effects of excess N, to the practical situation with emphasis given to the time of application and intensity of such procedures.

McNair 944 was planted in a randomized complete block design with four replications. Check treatments of 60 and 90 lbs. N/A were established. Five additional treatments at the 90 lb. N/A were established: leaching, flooding (36 and 48 hours at Central Crops; 36 and 48 hours at Border Belt Tobacco Research Station), root pruning one side of the row, and root pruning two sides of the row.

The N variable was established at the time of lay-by cultivation. The other treatments were established immediately following the first priming. The flooding treatment was implemented by damming the furrows around the plots and flooding for the specified time. Root pruning was accomplished by pulling a sharp blade through the soil at a depth of 9 inches and about 4 inches from the plant.

Averaged over the three environments (locations/years), the high-N check generally produced the highest yield while the flooding and normal-N treatments produced significantly lower yields. There were no differences between the high-N check, pruning one side or leaching treatments.

The leaching, flooding, and normal-N check treatments produced significantly higher grade indices than the high-N check. The pruning two sides treatment, although not different from the high-N check, consistently exhibited the lowest grade index.

The two check treatments differed by about three percentage points for reducing sugar levels in 1983. The normal-N check, pruning one side, and flooding treatments were not significantly different, indicating the pruning and flooding treatments were successful in increasing the sugar concentrations toward normal levels. In 1983, total alkaloids ranged between 2.58% for the normal-N check and 3.25% for the high-N check and were significantly different. No difference was detected between the normal-N check and pruning one side treatments, thus indicating a decrease

2000269703

Source: https://www.industrydocuments.ucsf.edu/docs/qsyk0000

of the alkaloid level in the pruning treatment toward the normal-N level. All other treatments were not different from the high-N check. Total N levels were not different between any management treatment and the high-N check. The normal-N check was significantly lower for total N than all other treatments. The chemical data for 1984 have not been fully analyzed at this time.

It is apparent that leaching, flooding, or root pruning treatments to over-fertilized tobacco are not deleterious to yield and chemical and physical quality. Such treatments appear to be somewhat beneficial in producing tobaccos with characteristics indicative of tobaccos produced under normal fertility regimes. It appears unlikely, however, that such treatments would be of significant utility in designing practical management systems to produce tobaccos possessing "normal fertility" characteristics. From this and other studies, it is suggested that quality tobacco can best be provided by the proper choice of soil, fertility, tillage methods, and soil moisture managements that impinge on the crop during its development rather than during its maturation.

Restricting Shoot Elongation of Tobacco Transplants with Alar (R. C. Long)

Hot, early spring temperatures before normal transplanting time often results in too rapid seedling growth. Transplanting may be delayed by rainy weather, a situation which also leads to excess growth before transplanting. Evidence is also emerging that greenhouse grown transplants tend to be spindly. Each of these situations would benefit from a means of retarding rapid growth and producing a sturdy transplant without sacrificing yield and quality or disrupting normal physiological processes. Previous thesis research (Amin; M.S., 1975) showed that Alar (succinic acid 2,2-dimethylhydrazide) would stimulate rooting and retard shoot elongation when included in the nutrient solution of hydroponically-grown tobacco seedlings.

To test the hypothesis that application of Alar to the plantbed several weeks prior to transplanting would provide more uniform transplants, a study with the following objectives was designed to determine the effect of Alar on:

a) stem elongation in the tobacco plantbed when applied at different times before transplanting,

b) physiological processes, e.g., rate of flowering, and

c) agronomic performance and chemical quality of plants grown to maturity and harvest.

Standard plantbeds were sown with McN-944 at the Border Belt Tobacco Research Station. On April 11, the plantbed was marked off into 5 sq. yd. areas. A randomized complete block design with four replications was used. Three treatments were established: a) check, b) early application (EA) on 4/11/84, or c) late application (LA) on 4/16/84. On the dates indicated, Alar at 4000 ppm was sprayed on the plantbeds to the point of run-off.

2000269704

Source: https://www.industrydocuments.ucsf.edu/docs/qsyk0000

On April 20, a 1 sq. ft. area from each bed was pulled clean. The stem length to the bud was measured and the plants divided into three groups depending on size: a) small -- 10 cm length; b) optimum -- <10-17 cm; c) large -- >17 cm. The data in the following table shows that the early Alar application (EA) dramatically reduced stem elongation relative to the check. Not only did the early application reduce the percentage of large plants and increase the percentage of small plants, but it tended to increase the percentage of optimum size plants. The data would further suggest that a second pulling a few days later would have provided a higher percentage of optimum-size transplants than the other treatments.

Percentage of Total Plants in Each Size Category

Size Category	Treatment		
	Check	LA	EA
Small	44.2	40.9	62.2
Optimum	25.0	23.0	31.3
Large	30.8	36.1	6.6

Ten plants of optimum size were taken from each bed and the roots wrapped in wet paper towels. The plants were maintained under subdued light in the laboratory for 17 days at which time the new root growth was cut from the tap root, dried, and weighed. The stem was also measured for length, then dried and weighed. The growth retarding effect of the EA treatment noted in the plantbed continued to exert its influence for this additional time period (see table below). No difference was noted in root dry weight among treatments although the specific weight of the stem was about 65% greater in the EA than the check treatment. This also indicates the treatment produced plants with a sturdy stem that would be helpful in allowing the transplant to better undergo the shock of transplanting and establishing a new root system, particularly under heat or moisture stress conditions.

It appears the LA treatment was applied too late to have much of an effect on stem elongation.

Root and Shoot Characteristics of Optimum-Size Plants After 17 Days Growth

Variable	Treatment		
	Check	LA	EA
Stem length (cm)	15.4	14.1	12.3
Stem dry wt. (mg/plant)	45.9	43.1	61.7
Root dry wt. (mg/plant)	5.1	5.2	4.8
Stem specific wt. (mg/plant)	2.98	3.06	5.02

Optimum-size transplants from each bed were transplanted into the field on April 20. There was virtually no difference in the time of flowering between the check and LA treatments; the EA treatment flowered about one and one-half days earlier than the others. There were no differences in yield or reducing sugar levels among the treatments although the alkaloids were slightly lower in the EA treatment than the others.

2000269705

Source: https://www.industrydocuments.ucsf.edu/docs/qsyk0000

There are indications that Alar may be useful in retarding shoot growth in the plantbed. Potential advantages of this effect would be to slow the growth when weather conditions are unfavorable for transplanting, and to produce sturdier, more uniform transplants without adversely affecting physiological processes or agronomic performance. Additional testing is necessary to confirm these results.

Production of Tobacco for Protein and Biomass (R. C. Long, T. A. Bartholomew and A. O. Dudley)

A major concern regarding use of tobacco as a source of food-grade protein has been potential yields and associated costs of production. Two general approaches have been taken to provide information on these concerns: a) improvements in cultural practices to increase yields, and b) development of cultural practices to reduce production costs.

The investigations were conducted only at the Border Belt Tobacco Research Station in 1984. Standard plantbed procedures of methyl bromide fumigation, seeding rate, fertilization, and plastic covers were used, unless otherwise noted. Plot size was 1.37 x 4.57 m.

Population: By seeding pelleted Speight G-28 in 10 cm rows and thinning when the plants were about 10 cm tall, plant populations ranging from 185,000 to 1.8 million plant/ha were established. Populations established by thinning did not grow as rapidly as those grown in randomly seeded plantbeds. Biomass yield increased from 160 mt/ha at 62,000 plants/ha to nearly 181 mt/ha at 247,000 plants/ha, but these values fell far short of the 245 mt/ha yield obtained at 5.6 million plants/ha with the randomly seeded treatment. Even though extremely high populations (i.e., randomly seeded) are most subject to damage from Erwinia caratovora which results in loss of up to 80% of the initial population, such losses do not adversely affect yield. It is of interest to note that protein yield appears to decline slightly with increasing population, being particularly depressed at very high populations. This response may be due to the lower percent lamina at high populations at the 1st harvest when biomass yields are greatest.

Plugs: The possibility of producing tobacco seedlings in plugs under greenhouse conditions was investigated as a possible way to cut production costs. Pelleted Speight G-28 seed was sown into 1.9 cm Techniculture plugs and germinated in the greenhouse. On April 25, the plants were about 5 cm in diameter and were hand-transplanted into 20 cm rows at five populations ranging from 62,000 to 309,000 plants/ha. Using irrigation, the plug-grown plants grew off rapidly and were harvested in four weeks. Five harvests were made during the season. Biomass yields increased linearly from 125 mt/ha at 62,000 to 180 mt/ha at 247,000 pl/ha. For unknown reasons, yields of the 309,000 plants/ha population were low at all harvests and total seasonal yield was approximately 140 mt/ha. The yields of the plug-grown plants were considerably less than the seeded and thinned plants, perhaps due to the fact they were smaller at transplanting than their conventionally-grown counterparts.

Smaller plugs (.9 cm diameter) were also tested at two populations. At transplanting, the plants were about 3 cm diameter but grew off very well

2000269706

Source: https://www.industrydocuments.ucsf.edu/docs/qsyk0000

under irrigation. Yields from the five harvests approximated those from the larger plugs. The smaller plugs might offer an attractive benefit/cost ratio considering the fact that 400 plants can be grown in the greenhouse in the same space as 144 of the larger plugs.

It should also be noted here that, at the time they came from the greenhouse, the seedlings were very uniform in size. It was necessary, however, to supply approximately 200 ppm N to them in the greenhouse to keep them green and growing uniformly.

In a side experiment, four rows of tobacco were set with a mechanical transplanter using the large-plug-grown plants. Although a bit of difficulty was experienced at first in placing them properly on the setter fingers, the problem was soon overcome and the plants were consistently set to the proper depth. Near ideal moisture conditions allowed them to take root quickly and to initiate growth rapidly. The plants grew well throughout the season. Lodging of plants was not observed. After harvest, roots were dug and examined. They showed no evidence of the plug or of any root binding.

Because these plug-grown plants grow off rapidly, and because a transplanter is already available that can remove the plugs from the flats and plant them at a rate up to 30,000/hr, this type of system seems to have much potential in conventional tobacco production for the large farmer possessing irrigation capabilities.

Direct-seeding: Direct-seeding (no soil fumigation or plantbed covers) was compared to conventional seeding. Seeded two weeks later than the conventional procedure and covered only with pine straw, germination and growth were also slower. Enide did a good job in controlling broad-leaf weeds. Although the plants were slightly smaller at the first harvest than the conventionally-seeded treatment, the five harvests were made at the same time for both treatments. Biomass yields of the four genotypes tested were about 70% of the conventional treatment.

Although the yields are less in the direct-seeded treatment, only a full calculation of the cost of production under this system and expected revenue from products will determine the potential of this system compared to the conventional system.

Genotypes: Four genotypes, MD-609, G-28, TI-560, and TI-174, were grown under conventional plantbed procedures. Growth preceeding the first two harvests was excellent and biomass yields were exceptionally high. Although Erwinia reduced the plant stands after the second harvest, yields were still good. The average biomass yield for the study over the five harvests was slightly more than 246 mt/ha.

In summary, progress continues to be made on several fronts with regard to increasing production, and improving production procedures. The plug system has promise both for protein production and conventional tobacco production, but further study is necessary to determine exactly how it can be used in each situation. Erwinia continues to be a major problem.

2000269707

Source: https://www.industrydocuments.ucsf.edu/docs/qsyk0000

GRADUATE STUDENTS:

Bartholomew, T. A. (U.S.A.), M.S., under R. C. Long
Felipe, E. (Venezuela), M.S., under R. C. Long
Goenaga, R. J. (U.S.A.), Ph.D., under R. C. Long and R. J. Volk

PUBLICATIONS:

Beatson, R. A., E. A. Wernsman, and R. C. Long. 1984. Divergent mass selection for carotenoids in a flue-cured tobacco population. Crop Sci. 24:67-71.

PAPERS PRESENTED AT PROFESSIONAL MEETINGS:

Felipe, E., and R. C. Long. Management of flue-cured tobacco under excess nitrogen. 31st Tobacco Workers' Conference, Pinehurst, NC, Jan. 7-10, 1985.

Long, R. C. Progress in growing tobacco for biomass and protein. 8th International Tobacco Scientific Congress, Vienna, Oct. 7-12, 1984.

Long, R. C., and J. A. Weybrew. Manipulating the growth of tobacco to meet quality preferences. 8th International Tobacco Scientific Congress, Vienna, Oct. 7-12, 1984.

2000269708

Source: https://www.industrydocuments.ucsf.edu/docs/qsyk0000

Title: Tobacco Breeding and Genetic Research

Project Leader: James F. Chaplin

I. Summary of Research:

Interspecific hybridization between N. rustica and N. tabacum for different alkaloid levels. Two species of Nicotiana produce appreciable amounts of nicotine, N. tabacum and N. rustica. N. rustica generally has considerably higher nicotine levels, based on percentage of dry weight, than N. tabacum. With the stabalizing of a low total alkaloid line of N. tabacum (.20%) it was thought desirable to try to intergress the gene(s) for alkaloid production from N. rustica into N. tabacum. The cross between a 4N low alkaloid Nicotiana tabacum line and the high alkaloid producing N. rustica cv Brasilia was made in 1969. The alkaloid level was intermediate between the two species. The F_1 was planted in the greenhouse and backcrossed to a diploid or 2N low alkaloid N. tabacum line. The first backcross material (rus x 4NLA) X 2N LA was planted in the field at Oxford, N. C. in 1970. This being the first chromosomal break-down generation, one would expect a considerable number of plants with the low alkaloid character. One hundred-one (101) of the 200 first backcross plants which were planted, or approximately 50 percent, ranged in alkaloid content from 0.04 to 0.49, indicating that the chromosome(s) for alkaloid synthesis from N. rustica had been eliminated. Plants from the low alkaloid parent in the same test ranged from 0.12 to 0.26 percent total alkaloids (TA). The population appeared to have a definite break for percentage of total alkaloids between the 0.49 and 0.67 percent. Ninety-nine (99) of the plants gave a range of TA from 0.67 to 6.01 percent indicating the retention of a chromosome or chromosomes or some genetic factor(s) from N. rustica for alkaloid production. Plants of N. rustica in this test ranged in total alkaloid levels from 4.11 to 5.39 percent. The large number of plants containing the high alkaloid charcteristics and the varying alkaloid content between plants suggests more than one chromosome is involved in total alkaloid production in N. rustica.

In 1970 the 99 plants with alkaloid content from 0.67 percent to 6.01 percent were backcrossed to the 2N low alkaloid N. tabacum line. The BC_2 plants were grown in the greenhouse in 1971. The greenhouse plants were topped to about five (5) leaves when they were about two (2) months old and green samples taken from top two leaves about two (2) weeks after topping. Approximately 60 plants from each BC_2 crosses were sampled. All of the 99 lines gave a greater proportion of low's than high's. The highest alkaloid plant in this population was 2.71 percent. In the same test the total alkaloid levels of N. rustica plants ranged from 2.08 to 4.30 and plants from the low alkaloid line ranged from 0.02 to 0.22 percent. The intermediate levels in the heterozygous material would be expected.

Fifteen high alkaloid plants from the BC_2F_1 lines were self pollinated. Sixty BC_2F_2 plants from each of the 15 BC_2F_1 plants were grown in the greenhouse in 1972. The method of growing, topping and sampling was the same as previously described. Five of the BC_2F_2 lines were selected to continue to the BC_2F_3. These were lines 20, 23, 29, 69 and 108. In the analysis of the BC_2F_3 lines, line 20 had 17 plants equal to the low parent and 43 plants

2000269709

Source: https://www.industrydocuments.ucsf.edu/docs/qsyk0000

with total alkaloid levels between 0.61 and 3.00 precent; line 23 had 39 lows and 21 plants from 0.61 to 2.40 percent total alkaloids; line 29 had 33 lows and 27 plants from 0.61 to 2.70 percent total alkaloids; line 69 had 24 lows and 35 plants between 0.61 and 2.40 percent; and line 108 had 36 lows and 20 plants from 0.61 to 2.70 percent total alkaloids. In this test N. rustica plants ranged from 3.35 to 5.00 and those in the low alkaloid line from 0.05 to 0.20 percent total alkaloid.

Twenty plants in the BC_2F_3 were selected and selfed and the BC_2F_4's grown. The BC_2F_3 progeny were grown in the greenhouse in 1973. Fourteen (14) plants from each of the these progenies were sampled for total alkaloids. These data show that none of the lines were homozygous; however, there were two lines 108-30 and 108-58 that had a very low number of low alkaloid plants. It is also interesting to note that in most of the lines the highest plants did not approach that of N. rustica. This observation and the fact that there continued to be wide variations in the total alkaloid content within lines would indicate that there may be considerable heterozygosity and possibly more than one gene controlling total alkaloid production in these lines.

In 1974, 102 plants were selected from seventeen BC_2F_4 lines and selfed pollinated: 3-25, 23-59, 29-3, 29-24, 29-33, 29-35, 29-45, 29-49, 69-3, 69-47, 69-31, 108-12, 108-17, 108-21, 108-29, 108-30 and 108-58. The plants were grown in the greenhouse and 10, BC_2F_5 plants from each of the selected BC_2F_4 progeny were sampled for total alkaloids. Again there appeared to be considerable variation in the alkaloid levels and very few plants had alkaloid levels equal that of N. rustica. Some of the progeny had all lows indicating that the rustica chromosome or chromosomes for total alkaloid production had been lost. There were 16 progenies that produced no lows. It is realized that the populations were small and if there had been more plants a low may have been observed. This was the first generation where progenies were observed that did not appear to segregate for low total alkaloids. Eleven of those lines came from a single BC_2F_2 plant and five of them from a single BC_2F_3 plant. Based on the progeny of the five plants the range of total alkaloids was from 0.62 to 4.08 percent. This would indicate more than one gene is responsible for total alkaloid production in this material.

There was still considerable self sterility in the populations and some of the high alkaloid lines did not set seed. Forty-six (46) high alkaloid plants were advanced to the BC_2F_6 generation. The BC_2F_6 lines were grown in the greenhouse in 1975. Ten plants from each of the 46 lines were sampled. As previously, none of the plants equaled N. rustica in percent total alkaloids.

Progenies from two plants, 108-30-6 and 108-30-7, produced 0 lows in the BC_2F_5 progenies. Plant number 6 had progeny highs from 0.64-2.25 percent and plant number 7 had progeny highs from 0.68 and 2.72 percent.

In 1976, 199 BC_2F_6 progenies were grown. These were planted in the field and green punch samples taken from each of 16 plants from each line from

2000269710

Source: https://www.industrydocuments.ucsf.edu/docs/qsyk0000

the group. Eighty-nine (89) of the lines had no lows and appeared to have chromosome(s) or genes for alkaloid production from N. rustica incorporated in them. This was the first time the material had been grown in the field and the total alkaloid levels were high. For example N. rustica averaged 11.15 percent total alkaloids and the low alkaloid line 0.31 percent. While all of the 89 lines indicated that N. rustica genes or chromosomes had been transferred there was still considerable variation between lines and considerable variation within lines. While it was difficult to determine which were stable, some of the lines appeared to be stabilized, therefore, the tobacco from 25 of these lines were harvested and cured.

Based on the green punch samples from 16 plants in each line and the cured samples from rows, 24 of the lines were considered stable - that is no lows were produced. At this point it was decided that stable lines had been developed with the N. rustica genes (chromosome) for total alkaloid production. The results indicated that four levels of total alkaloids (Table 1) had been developed. A low level, a low intermediate level, a high intermediate level and a high level were obtained. The high lines did not equal those of N. rustica. The reason for this is not known unless dilution is a factor. N. rustica is a low yielding type and it is possible that the alkaloids are concentrated in a smaller area giving a higher concentration than N. tabacum.

Attempts are being made to try to determine if the genes for alkaloid production are the same in rustica as in tabacum. This work is underway, however, preliminary information would indicate they are. The genetics of this transfer is difficult to follow or explain. Since there is more than one gene or one chromosome involved it is difficult to assertain when both transfers occured. The variation in alkaloid levels from plant to plant makes the genetic interpretation difficult, however, the objective was accomplished, even though the alkaloid levels of the transferred material was not as high as that of N. rustica.

Table 1. Lines Developed with Varying Alkaloid Levels

Line	T.A. (%)
Low	1.50
	1.65
Low Intermediate	2.45
	2.71
High Intermediate	3.58
	3.79
High	4.40
	4.15

II. G
III. P
IV. P
1.
2.
3.
4.
5.
6.
7.
8.
V. Manu
VI. Manu
1.
2.

2000263711

Source: https://www.industrydocuments.ucsf.edu/docs/qsyk0000

II. Graduate Students: One. (On one other committee.)

III. Post-Doctoral Fellows: None.

IV. Publications:

1. CHAPLIN, J. F. and L. G. BURK. Registration of LMAFC 34 tobacco germplasm. Crop Sci. 24 (1984) 1220.

2. CHAPLIN, J. F. Genetic Engineering of Tobacco: Possibilities and Prospects - Statement. CORESTA Information Bulletin - 8th International Tobacco Scientific Congress. Vienna P. 33-39 (1984).

3. CHAPLIN, J. F. and V. A. SISSON. Interspecific hybridization between N. rustica and N. tabacum for different alkaloid levels. CORESTA Information Bulletin - 8th International Tobacco Scientific Congress. Vienna P. 93-94 (1984).

4. CHORTYK, O. T., J. F. CHAPLIN and W. S. SCHLOTZHAUER. Growing Selenium enriched tobacco. J. Agr. & Food Chem. 32 (1984) 64-68.

5. JACKSON, D. MICHAEL, R. F. SEVERSON, A. W. JOHNSON, J. F. CHAPLIN and M. G. STEPHENSON. Ovipositional response of tobacco budworm moths (Lepidoptera: Noctuidae) to cuticular chemical isolates from green tobacco leaves. Environmental Entomology 13 (1984) 1023-1030.

6. SEVERSON, RAY, F., R. F. ARRENDALE, O. T. CHORTYK, A. W. JOHNSON, D. M. JACKSON, G. R. GWYNN, J. F. CHAPLIN and M. G. STEPHENSON. Quantitation of the major cuticular components from green leaf of different tobacco types. J. Agr. Food Chem. 32 (1984) 566-570.

7. STAVELY, J. R., J. F. CHAPLIN, and G. R. GWYNN. Registration of Bel 921 brown spot resistant flue-cured tobacco germplasm. Crop Sci. 24 (1984) 830-831.

8. WOODLIEF, WILLIAM G., JESSE J. LAM JR., JAMES F. CHAPLIN, W. S. SCHLOTZHAUER and RAY F. SEVERSON. Deproteinization effects on homogenized leaf cured (HLC) products. Beitrage zur Tabakforschung International Vol. 12, No. 4, (1984) 211-217.

V. Manuscripts Accepted for Publication: None.

VI. Manuscripts in Review:

1. JACKSON, D. MICHAEL, J. F. CHAPLIN, R. F. SEVERSON and M. G. STEPHENSON. Cuticular leaf chemistry and insect resistance of three reciprocally grafted tobacco types.

2. WILLIAMSON, R. E., L. A. NELSON, J. F.CHAPLIN and H. W., SPURR JR. Calculations of tar in tobacco from other analytical data.

2000269712

Source: https://www.industrydocuments.ucsf.edu/docs/qsyk0000

VIII. Papers Presented at Professional Meetings:

1. Invited Papers:

   a. CHAPLIN, J. F. Genetic engineering of tobacco: Possibilities and prospects - statement. Presented to the 8th International Tobacco Scientific Congress. Vienna, Austria.

   b. CHAPLIN, JAMES F. Status of mosaic resistant flue-cured tobacco cultivars. Presented to the 31st Tobacco Workers Conference.

2. Contributed Papers:

   1. CHAPLIN, J. F. and V. A. SISSON. Interspecific hybridization between N. rustica and N. tabacum for different alkaloid levels. Presented to the 8th International Tobacco Scientific Congress. Vienna, Austria.

   2. CHAPLIN, JAMES F. and VERNE A. SISSON. Interspecific hybridization between N. rustica and N. tabacum for different alkaloid levels. Presented to the 31st Tobacco Workers Conference.

   3. GAY, S. L., L. P. BUSH, and J. F. CHAPLIN. Survey of minor alkaloid content in various tobacco types at different growth and curing stages and leaf positions. Presented to the 38th Tobacco Chemists' Research Conference.

   4. LEGGETT, J. E., J. F. CHAPLIN, J. L. SIMS and C. T. MacKOWN. Nitrate accumulation by reciprocal grafts of burley and flue-cured tobacco. Presented to the 31st Tobacco Workers Conference.

   5. SEKIN, S., D. W. DeJONG, W. S. SCHLOTZHAUER, J. F. CHAPLIN and S. K. HOLLIDAY. Smoke properties of all-turkish tobacco cigarettes with emphasis on aegean tobaccos. Presented to the 38th Tobacco Chemist Research Conference.

2000269713

Source: https://www.industrydocuments.ucsf.edu/docs/qsyk0000

TITLE: NC05563 - BURLEY TOBACCO BREEDING AND GENETICS

PROJECT LEADER: Rebeca C. Rufty

I. Summary of Research:

The objectives of this project are to:

a) Develop disease-resistant burley tobacco breeding lines and cultivars with high yield and quality.

b) Study inheritance of resistance to certain pathogens and initiate transfers of resistance using conventional and tissue culture methodologies.

Primary targets in 1984 were to identify new sources of resistance to Tobacco Etch Virus (TEV) and Tobacco Vein Mottling Virus (TVMV), and to evaluate commercial cultivars and breeding lines for resistance to these viruses under field conditions.

The cultivar Havana 307, a cigar-wrapper tobacco, was found to be resistant to both TEV and TVMV as well as potato virus Y (PVY). Havana 307 was consequently crossed with the cultivars Ky 14 and MB(FV) and F_1 hybrids subjected to anther culture. Ensuing haploid lines were screened for resistance to TEV in the greenhouse. Resistant selections are now being chromosome-doubled using the leaf-midvein culture technique. Sexual generations (F_1, F_2 and back-crosses) of above crosses are also being evaluated in the greenhouse to determine the mode of inheritance controlling virus resistance.

The breeding line Greenville 131 (GR 131) from Tennessee was found to be highly resistant to both TEV and TVMV under field conditions. GR 131 was subsequently hybridized with several burley cultivars and F_2 seed will be available for field testing in 1985. The following maternally derived dihaploid (MDH) lines derived from the cross Ky 14 x NC 107 were also found to be virus tolerant and high yielding: MDH 1, MDH 5, MDH 17, MDH 19, MDH 25, and MDH 28. These lines will be tested again in 1985.

Germplasm was also evaluated for resistance to tobacco blue mold (Peronospora tabacina) at Laurel Springs, North Carolina, as well as Gurabo, Puerto Rico. Approximately 40 dihaploid lines developed via anther culture from blue mold resistant x susceptible crosses were tested along with several European burley cultivars thought to be blue mold resistant. Blue mold did not develop in North Carolina in 1984, but disease development was adequate in Puerto Rico. Eighteen anther-derived dihaploid lines were selected on the basis of low disease rating and superior agronomic characteristics and will be further evaluated in 1985. All European burley cultivars were found to be susceptible.

2000269714

Source: https://www.industrydocuments.ucsf.edu/docs/qsyk0000

V. Manuscripts Accepted for Publication:

Gooding, G. V., Jr., E. A. Wernsman and Rebeca C. Rufty. 1984. Reaction of Nicotiana tabacum L. cv. Havana 307 to Potato Virus Y, Tobacco Vein Mottling Virus, Tobacco Etch Virus and Peronospora tabacina. Tob. Sci. In Press.

Reed, S. M. and Rebeca C. Rufty. 1984. Reaction of callus of blue mold resistant and susceptible Nicotiana genotypes to infection by Peronospora tabacina. Tob. Sci. In Press.

Rufty, R. C., E. A. Wernsman and G. V. Gooding, Jr. 1984. Method for storage of Peronospora tabacina sporangiospores. Phytopathology 74:852. (Abstract)

Rufty, R. C., G. V. Gooding, Jr. and E. A. Wernsman. 1984. Association between resistance to Potato Virus Y and susceptibility to Peronospora tabacina in tobacco. Agronomy Abstracts: 86.

VII. Papers Presented at Professional Meetings:

Rufty, R. C., E. A. Wernsman and G. V. Gooding, Jr. 1985. Inheritance of resistance to tobacco blue mold. 31st Tobacco Workers' Conference, Pinehurst, N.C..

Wernsman, E. A., D. F. Matzinger, and R. C. Rufty. 1984. Characterization of Androgenic and Gynogenic Doubled Haploids from Inbred Cultivars. 89th Int. Tobacco Scientific Congress, Vienna. Oct. 7-12, 1984.

IX. Acknowledgment:

The cooperation of Drs. E. A. Wernsman and G. V. Gooding, Jr. and C. E. Main is gratefully appreciated.

2000269715

Source: https://www.industrydocuments.ucsf.edu/docs/qsyk0000

Title: NC 05469 Tobacco Breeding for Germplasm and Varieties Resistant to Pests and Advantageous to Health

Project Leader: G. R. Gwynn

I. Summary of Research:

A. Insect Resistance: Fifty-one F_4 breeding lines from a cross of TI 165 x either NC 2326 or NC 82 were grown at Tifton, Georgia and Oxford, North Carolina. Natural infestation with budworms and budworm damage was evaluated at Tifton and larval survival and growth rate under artificial infestation was evaluated at Oxford. Washes of leaf surfaces with methylene chloride were performed at Oxford. Certain lines appeared to be similar to TI 165, the resistant parent. Chemicals from the leaf surfaces are being measured. Statistical association between chemical levels and insect results will be determined when the data is available. Other groups of breeding lines from crosses of flue-cured with TI 1024, TI 1396 and TI 1298 were evaluated at Tifton and Oxford. Breeding lines involving 4-way crosses of several resistant TI lines combined with several flue-cured varieties were evaluated at Tifton for bud-worm resistance.

B. Breeding for Reduced Sucker Development: Forty-one F_3 breeding lines involving four TI lines crossed with either Coker 319 or Virginia 115 were grown at Oxford in 1984. Sucker number and growth were measured on individual plants in a three-rep experiment. At least five lines were as low as the lowest flue-cured check, Virginia 115, in sucker number per plant and four lines had an average weight of 81 gms of suckers per plant while Va 115 produced 177 gms of suckers per plant. Eighteen of the better performing lines will be planted in 1985 for more extensive evaluation and selection. A study comparing potential breeding sources was completed and reported on in 1984. The article appeared in Tobacco Science 28:143-146, 1984.

C. Breeding for Bacterial Wilt Resistance: The fourth cycle of most of the breeding systems being evaluated in a bacterial wilt study previously reported on was obtained in 1984. The seed for the remaining systems will be obtained in 1985 and all systems evaluated in 1986. The 4th cycle will be obtained from a severe disease nursery in Lenoir County while the other cycles came from a mild location in Granville County. One hundred and eight doubled haploids from various crosses of wilt resistant varieties were grown on the Lenoir County location. Some of the entries compared quite favorably to the highly resistant check, NK 399. Other populations involving two-way crosses of resistant varieties were grown on the wilt nursery in Lenoir County and selections made for further testing in 1985. Combinations of resistances from different sources were tested in 1984 and selections made under disease conditions. Some of the sources

2000269716

Source: https://www.industrydocuments.ucsf.edu/docs/qsyk0000

were the Turkish tobaccos 79A and 79X while others were Japanese Enshu. These selections will be evaluated in 1985.

D. Breeding for Lower Phenols: The fourth cycle of a recurrent selection population for lower total polyphenols was evaluated at Oxford in 1984 and selections made for the fifth cycle. These were obtained in the greenhouse and the fifth cycle will be evaluated in 1985 at Oxford. A breeding study concerning Speight G-28 and seven TI's was conducted at Reidsville in 1984. Each of seven families, with each family consisting of the two parents, F_1 and F_2 populations, was grown under flue-cured conditions. Individual plants were sampled and analyzed by gas chromatography and colormetric techniques for total polyphenols and constituent polyphenols such as chlorogenic acid and rutin. Genetic analysis of the families will be obtained when all chemical determinations are completed. Results already show that some entries are much lower than the flue-cured parent Speight G-28 in total polyphenols as well as chlorogenic acid.

E. Breeding for Mosaic and Nematode Resistance: Germplasm from crosses involving Nicotiana repanda and N. tabacum were evaluated at Rocky Mount and Oxford, North Carolina and at Blackstone, Virginia. Some of the material was evaluated for its TMV resistance while other lines were evaluated for cyst nematode resistance in Virginia. Entries with TMV resistance have been obtained and selfs and backcrosses to flue-cured varieties are available. Resistance seems to be hypersensitive but more inclined than the N. glutinosa type to become systemic. Entries have been identified in the other group of lines that have less cyst numbers and less larval numbers than check varieties under field conditions. Genetic stability seems to be a problem at this stage but backcrossing and selection is being attempted to try and overcome this.

F. Breeding for Varietal Development: NC 85 was increased in 1984 and will be available for grower planting in 1985. It results from a cross of Coker 319 by Coker 298. It has high resistance to bacterial wilt and black shank and seems to have a higher level of nicotine than many other tobaccos. NC 2005 and NC 2069 were advanced to the 1985 Farm Test.

II. Graduate Students: None

III. Postdoctoral Fellows: None

IV. Publications:

Severson, R. F., G. R. Gwynn, J. F. Chaplin, J. D. Miles and M. G. Stephenson. 1984. Quantification of the major cuticular components from green leaf of different tobacco types. J. Agric. Food Chem. 32:566-570.

2000269717

Source: https://www.industrydocuments.ucsf.edu/docs/qsyk0000

Gwynn, G. R. 1984. Breeding sources for lower sucker production in tobacco. Tob. Sci. 28:143-146.

Gwynn, G. R. 1984. Registration of NC 50 tobacco. Crop Science 24, July-Aug. 825-826.

Stavely, J. R., J. F. Chaplin, and G. R. Gwynn. 1984. Registration of Bel 921 brown spot resistant flue-cured tobacco germplasm. Crop Science 24, July-Aug. 830-831.

V. Manuscripts Accepted for Publication:

Gwynn, G. R. 1984. Registration of NC 85 tobacco. Crop Science

VI. Manuscripts in Review:

Gwynn, G. R., R. F. Severson, D. M. Jackson, and M. G. Stephenson. Inheritance of sucrose esters containing β-methylvaleric acid in tobacco. Tobacco Science.

VII. Papers Presented at Professional Meetings:

Jackson, D. Michael, R. F. Severson, A. W. Johnson, G. Herzog, M. G. Stephenson, J. F. Chaplin, and G. R. Gwynn. 1984. Relationship between levels of cuticular diterpenes from several tobacco entries and observed tobacco budworm resistance. Plant Resistance to Insects Workshop, Charleston, SC, Feb. 21-23.

Severson, Ray F., D. M. Jackson, G. R. Gwynn, A. W. Johnson, M. G. Stephenson, and G. A. Herzog. 1984. Analysis of tobacco cuticular chemicals related to host plant resistance to insects. Plant Resistance to Insects Workshop, Charleston, SC, Feb. 21-23.

Stephenson, M. G., J. F. Chaplin, D. M. Jackson, R. F. Severson, A. W. Johnson, G. A. Herzog, and G. R. Gwynn. 1984. Techniques for field screening tobacco entries for host plant resistance to insects. Plant Resistance to Insects Workshop, Charleston, SC, Feb. 21-23.

Gwynn, G. R. 1984. Conventional and new breeding systems for developing resistance to bacterial wilt, Pseudomonas solanacearum. 8th International Tobacco Scientific Congress, Vienna, Oct. 7-12.

VIII. Graduate Student Theses Completed During Reporting Period: None

IX. Acknowledgements:

Thanks to Dr. R. E. Williamson and Dr. M. E. Snook for polyphenol research assistance. Thanks to Dr. R. F. Severson and Dr. D. M. Jackson for insect research assistance. Thanks to Dr. J. J. Reilly and Dr. D. A. Komm for nematode research assistance. Thanks to Mrs. J. D. Hardee, Mrs. E. H. Brummitt, Mr. B. H. Bunn, and Mr. R. M. Critcher for valuable technical assistance.

2000269718

Source: https://www.industrydocuments.ucsf.edu/docs/gsyk0000